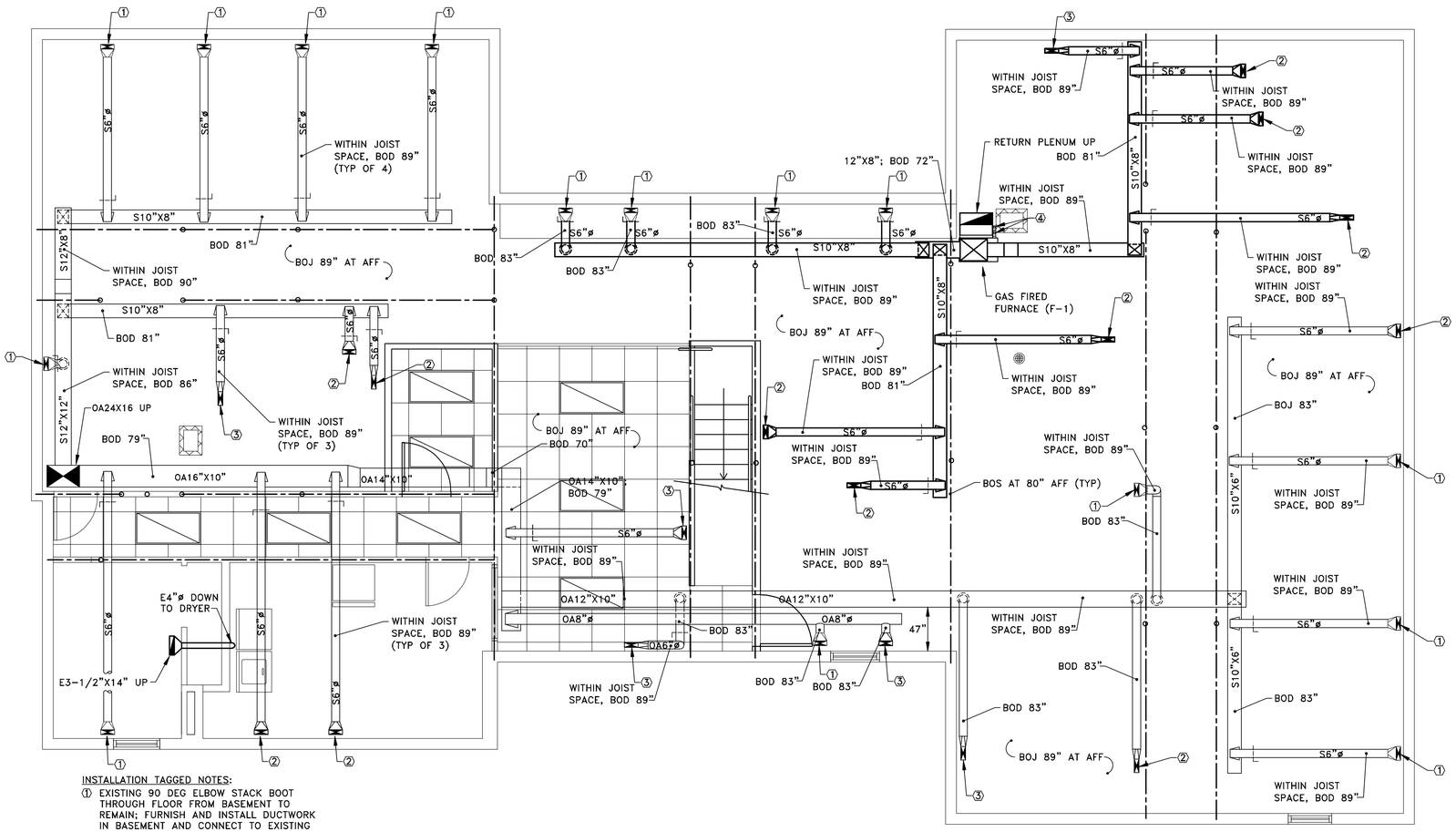

INSTALLATION TAGGED NOTES:

1. EXISTING 90 DEG ELBOW STACK BOOT THROUGH FLOOR FROM BASEMENT TO REMAIN; FURNISH AND INSTALL DUCTWORK IN BASEMENT AND CONNECT TO EXISTING 90 DEG ELBOW STACK BOOT
2. CONTRACTOR SHALL CREATE AN OPENING IN THE FLOOR AND FURNISH AND INSTALL A 90 DEG ELBOW STACK BOOT THROUGH FLOOR
3. CONTRACTOR SHALL FURNISH AND INSTALL A 90 DEG ELBOW STACK BOOT THROUGH EXISTING OPENING IN FLOOR
4. 2"ø SCH 40 PVC COMBUSTION AIR AND VENT PIPING UP.

1 / H-3 BASEMENT HVAC PLAN

SCALE: 1/4 = 1'-0"

NVA

LIVERPOOL ANIMAL WELLNESS

7270 BUCKLEY RD
LIVERPOOL, NY 13212

VETERINARY ARCHITECTURE Unleashed
A studio of RL Architecture, PLLC

RLARCHITECTURE, PLLC

PO Box 161
Davidson, NC 28036

ph. 704.756.3540
RLArchitecture.com

STATE OF NEW YORK · WILLIAM F. FUEGEL · 075883 · LICENSED PROFESSIONAL ENGINEER

FUEGEL ENGINEERING, PC
103 East Water Street
Suite 305A
Syracuse, New York 13202
315-423-4270

THIS DRAWING IS THE PROPERTY OF RLArchitecture, pllc AND IS NOT TO BE COPIED OR REPRODUCED IN PART OR WHOLE WITHOUT THE EXPRESSED WRITTEN PERMISSION OF RLArchitecture, pllc.

FOR CONSTRUCTION

REVISIONS

NO.	DATE	DESCRIPTION

DATE	10-6-2021
PROJECT #	2021.16
SCALE	AS NOTED
DRAWN BY	WFF

SHEET TITLE:

BASEMENT HVAC PLAN

SHEET NUMBER:

H-3

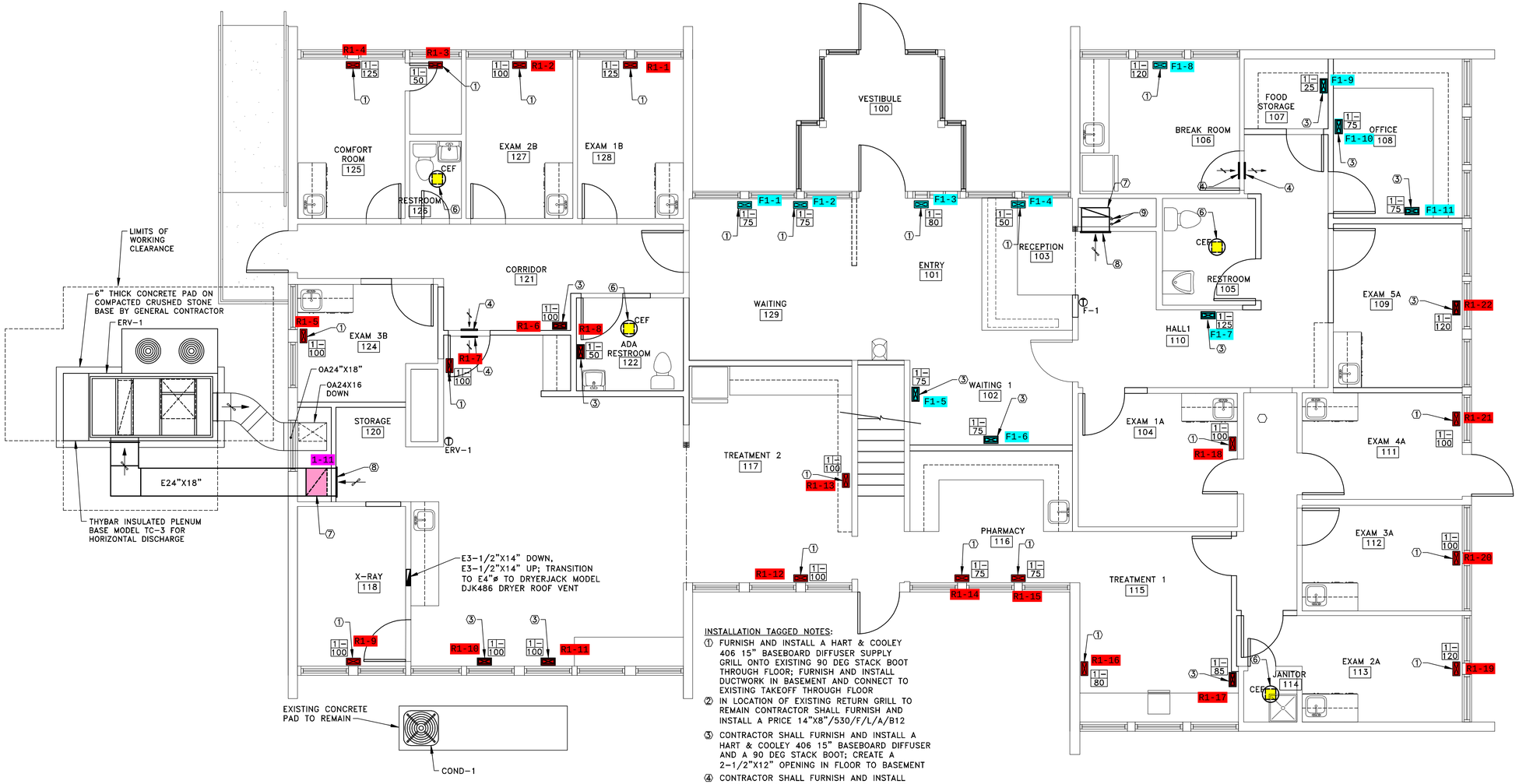

INSTALLATION TAGGED NOTES:

1. FURNISH AND INSTALL A HART & COOLEY 406 15" BASEBOARD DIFFUSER SUPPLY GRILL ONTO EXISTING 90 DEG STACK BOOT THROUGH FLOOR; FURNISH AND INSTALL DUCTWORK IN BASEMENT AND CONNECT TO EXISTING TAKEOFF THROUGH FLOOR
2. IN LOCATION OF EXISTING RETURN GRILL TO REMAIN CONTRACTOR SHALL FURNISH AND INSTALL A PRICE 14"X8"/530/F/L/A/B12
3. CONTRACTOR SHALL FURNISH AND INSTALL A HART & COOLEY 406 15" BASEBOARD DIFFUSER AND A 90 DEG STACK BOOT; CREATE A 2-1/2"X12" OPENING IN FLOOR TO BASEMENT
4. CONTRACTOR SHALL FURNISH AND INSTALL A PRICE 14"X8"/530/F/L/A/B12; CREATE AN OPENING IN THE DRYWALL TO CREATE AN AIR TRANSFER
5. NOT USED
6. FURNISH AND INSTALL A CABINET EXHAUST FAN AS SCHEDULED; CONNECT TO EXISTING DUCTWORK
7. 18"X24" RETURN DUCTWORK SHALL EXTEND VERTICALLY OF SUFFICIENT HEIGHT TO INSTALL RETURN AIR DIFFUSER DUCT TAKEOFF THEN TRANSITION TO 12"X24" UP TO WITHIN TRUSSES
8. CONTRACTOR SHALL FURNISH AND INSTALL A PRICE 24"X40"/530/F/L/A/B12 RETURN AIR GRILL; BOTTOM OF GRILL SHALL BE AT 12" AFF
9. 2"ø SCH 40 PVC COMBUSTION AIR AND VENT PIPING UP AND DOWN; TERMINATE THROUGH ROOF WITH CONCENTRIC VENT KIT IN STRICT ACCORDANCE WITH MANUFACTURER'S WRITTEN INSTRUCTIONS

1 / H-4 GROUND FLOOR HVAC PLAN
SCALE: 1/4 = 1'-0"

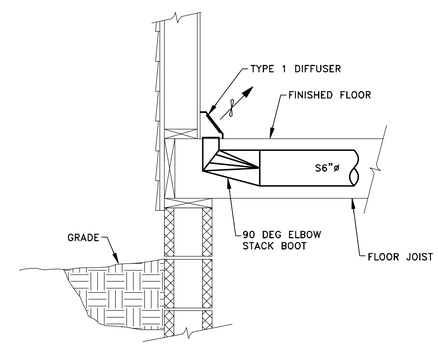

2 / H-4 DIFFUSER INSTALLATION DETAIL
NOT TO SCALE

NVA

LIVERPOOL ANIMAL WELLNESS
7270 BUCKLEY RD
LIVERPOOL, NY 13212

VETERINARY ARCHITECTURE Unleashed
A studio of RL Architecture, PLLC

RLARCHITECTURE, PLLC
PO Box 161
Davidson, NC 28036
ph. 704.756.3540
RLArchitecture.com

STATE OF NEW YORK · WILLIAM F. FUEGEL · 075883 · LICENSED PROFESSIONAL ENGINEER

FUEGEL ENGINEERING, PC
103 East Water Street
Suite 305A
Syracuse, New York 13202
315-423-4270

THIS DRAWING IS THE PROPERTY OF RLArchitecture, pllc AND IS NOT TO BE COPIED OR REPRODUCED IN PART OR WHOLE WITHOUT THE EXPRESSED WRITTEN PERMISSION OF RLArchitecture, pllc.

FOR CONSTRUCTION

REVISIONS

NO.	DATE	DESCRIPTION

DATE	10-6-2021
PROJECT #	2021.16
SCALE	AS NOTED
DRAWN BY	WFF

SHEET TITLE:

GROUND FLOOR HVAC PLAN AND DETAIL

SHEET NUMBER:

H-4

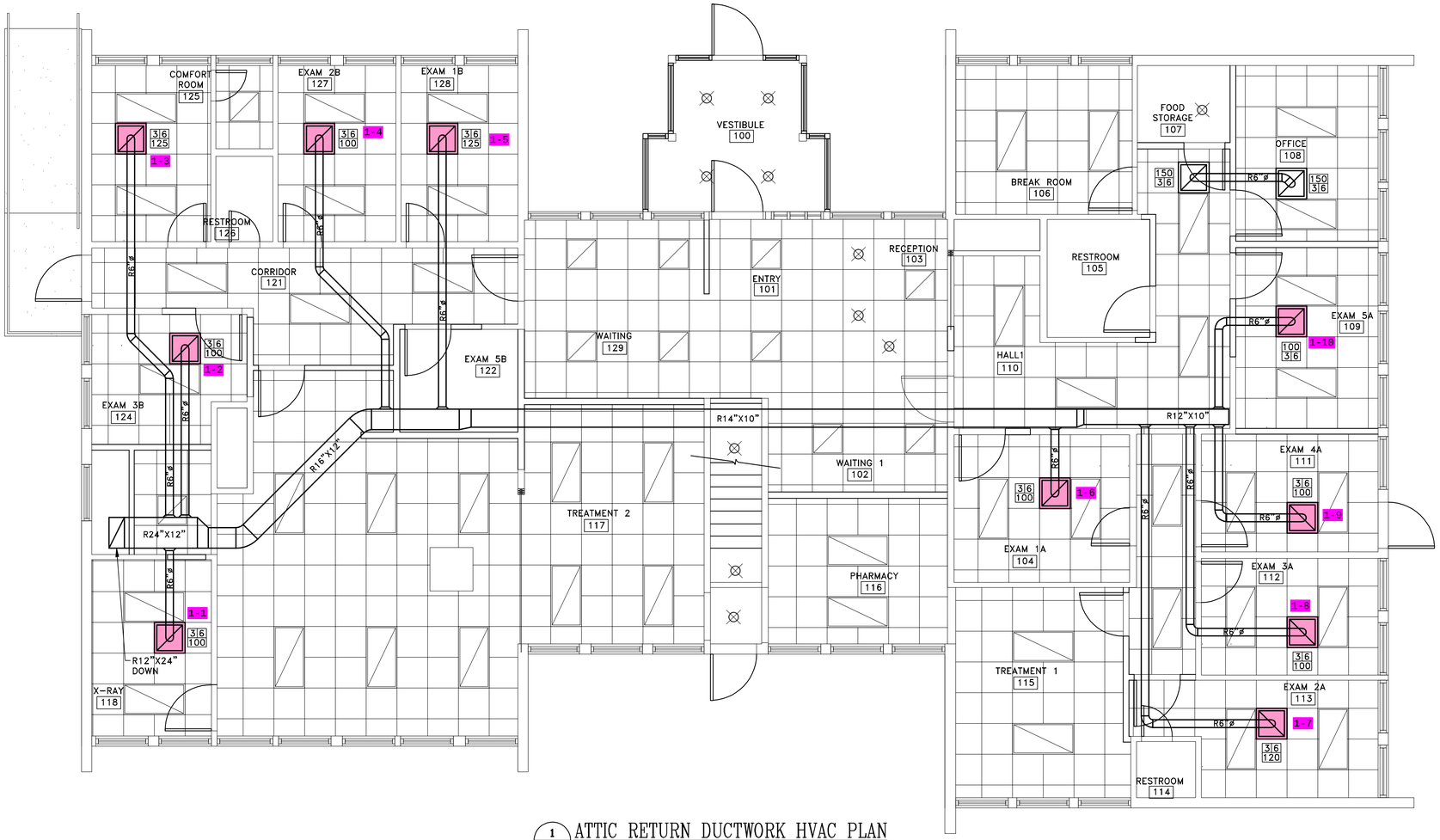

1 / H-5 ATTIC RETURN DUCTWORK HVAC PLAN

SCALE: 1/4 = 1'-0"

NVA

LIVERPOOL ANIMAL WELLNESS

7270 BUCKLEY RD
LIVERPOOL, NY 13212

VETERINARY ARCHITECTURE Unleashed
A studio of RL Architecture, PLLC

RLARCHITECTURE, PLLC

PO Box 161
Davidson, NC 28036

ph. 704.756.3540
RLArchitecture.com

STATE OF NEW YORK · WILLIAM F. FUEGEL · 075883 · LICENSED PROFESSIONAL ENGINEER

FUEGEL ENGINEERING, PC
103 East Water Street
Suite 305A
Syracuse, New York 13202
315-423-4270

THIS DRAWING IS THE PROPERTY OF RLArchitecture, pllc AND IS NOT TO BE COPIED OR REPRODUCED IN PART OR WHOLE WITHOUT THE EXPRESSED WRITTEN PERMISSION OF RLArchitecture, pllc.

FOR CONSTRUCTION

REVISIONS

NO.	DATE	DESCRIPTION

DATE	10-6-2021
PROJECT #	2021.16
SCALE	AS NOTED
DRAWN BY	WFF

SHEET TITLE:

ATTIC RETURN DUCTWORK HVAC PLAN

SHEET NUMBER:

H-5