KEY NOTES

17 APPLY RAYCHEM XL-TRACE, MODEL 5XL-1, SELF REGULATING HEATING CABLE. USE END SEAL KIT FROM MFR. PROVIDE P-TRAP IN CONDENSATE DRAIN ON COOLER SIDE OF COOLER-FREEZER PANEL WALL WITH OPEN-TOPPED TEE AT TRAP OUTLET. PROVIDE 6" OF FALL IN FREEZER DRAIN LINE PRIOR TO PENETRATING PANEL WALL.

30 LOCATION OF GREASE INTERCEPTOR SHOWN FOR REFERENCE ONLY - SEE DETAIL SHEET FOR MORE INFORMATION, SEE CIVIL DRAWINGS FOR ACTUAL LOCATION OF THE GREASE INTERCEPTOR ON SITE.

31 INSTALL FLOOR DRAIN FD-5 AT MOP SINK DEPRESSION WITH TOP OF STRAINER 0'-7" BFF.

39 PROVIDE TRAP SEAL PROTECTION DEVICE.

59 3/4" CONDENSATE PIPING OUT OF COOLER AND EXTEND OUTLET TO INDIRECT DRAIN, SECURE PIPING TO COOLER/FREEZER WALL WITH RUBBER INSULATED PIPE CLAMPS TO PREVENT GALVANIC CORROSION. SEAL ALL PENETRATIONS IN WALLS WITH PERMAGUM CORD. TERMINATE ABOVE FUNNEL WITH ELBOW AND AIR GAP.

63 BELOW SLAB BEVERAGE CONDUIT. 6" DIA SOLID-WALL SCHED 40 PVC USED AS BEVERAGE CONDUIT. NO FOAM CORE ALLOWED BELOW SLAB. USE LONG RADIUS SWEEPS. CAP EACH END DURING ROUGH-IN TO ENSURE PIPING INTERIOR REMAINS DRY AND WATER-TIGHT DURING CONSTRUCTION. SEE P-211 FOR MORE ON BEVERAGE CONDUIT.

64 COORDINATE 6" BEVERAGE CONDUIT INSTALLATION WITH ELECTRICAL CONTRACTOR PRIOR TO BREAKING GROUND. INSTALL 6" CONDUIT DEEP ENOUGH TO ACCOMMODATE DWV AND ELECTRICAL CONDUIT IN SAME AREA. REMOVAL AND RE-INSTALLATION OF ELECTRICAL, DWV, AND/OR BEVERAGE CONDUIT DUE TO LACK OF PROPER COORDINATION SHALL BE DONE SO AT THE PLUMBING CONTRACTOR'S EXPENSE.

67 INSTALL PIPING TIGHT TO WALL SO AS NOT TO INTERFERE WITH COOLER AND FREEZER SHELVES. PROVIDE UNION FITTINGS IMMEDIATELY DOWNSTREAM OF CONNECTION TO EVAPORATORS. ALL CONDENSATE PIPING SHALL BE SLOPED A MIN. 1/4" PER FOOT.

68 3/4" TYPE L COPPER. COVER WITH 1-3/8" I.D. X 3/4" ARMACELL A/P ARMAFLEX OVER HEAT TRACE CABLE.

74 INSTALL TRAP IN CONDENSATE PIPE.

97 SEE CIVIL DRAWINGS FOR CONTINUATION.

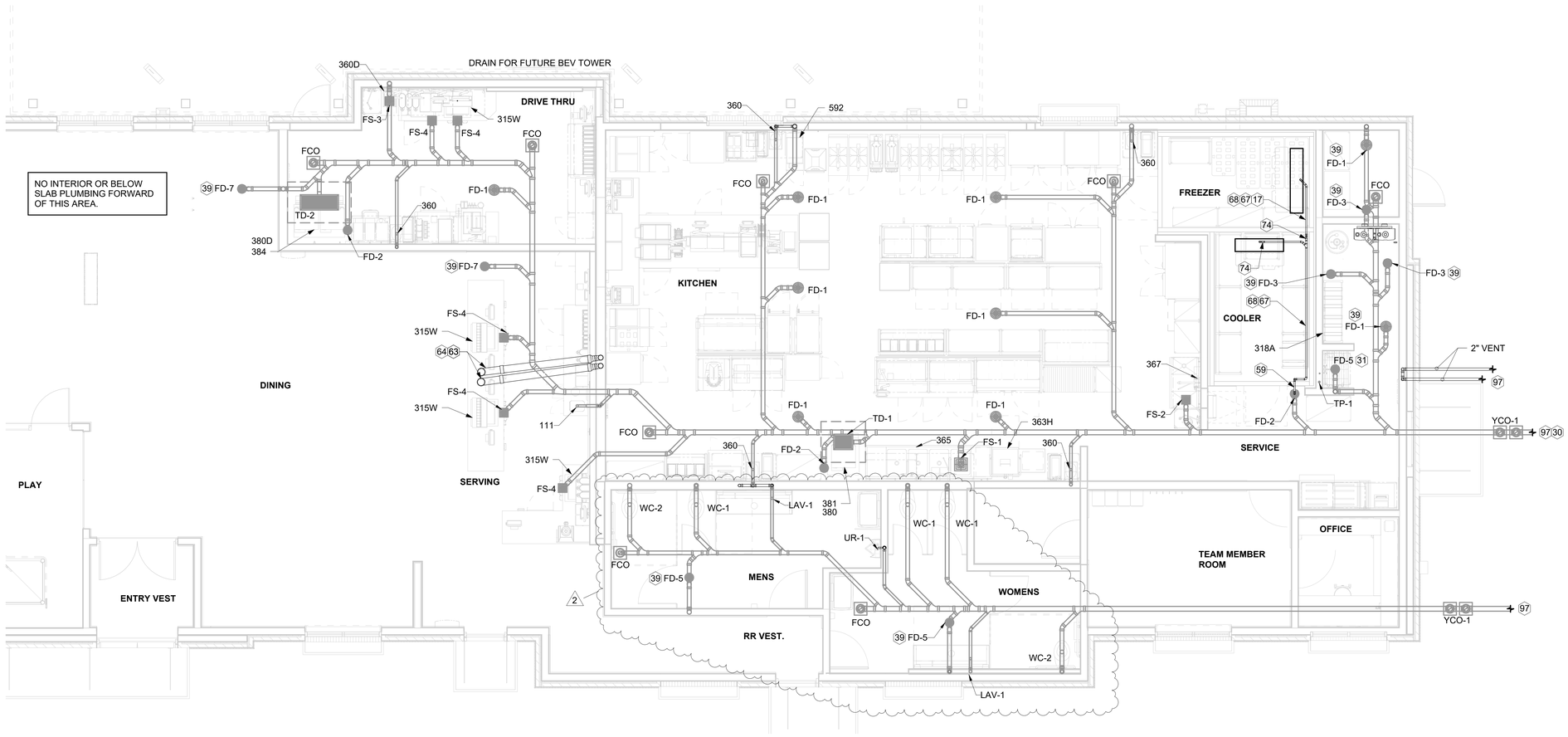

1 DRAIN WASTE AND VENT PLAN
1/4" = 1'-0"

Chick-fil-A
5200 Buffington Road
Atlanta, Georgia
30349-2998

Kurzynske & Associates
2705 Lebanon Pike - Suite One
Nashville, Tennessee 37214
Telephone: (615) 255-5203

ALABAMA REGISTERED PROFESSIONAL ENGINEER MARK T. KURZYNSKE NO. 27141
06/21/24

CHICK-FIL-A
VALLEY, AL

3215 20th Avenue
VALLEY, AL 36854

FSR#05772

BUILDING TYPE / SIZE: BTS LS BP
RELEASE: 23.09
PRINTED FOR
CONSTRUCTION

REVISION SCHEDULE

NO.	DATE	DESCRIPTION
2	06/21/2024	Construction Set

CONSULTANT PROJECT # 24035.CC.S
DATE 03/20/2024
DRAWN BY CH

Information contained on this drawing and in all digital files produced for above named project may not be reproduced in any manner without express written or verbal consent from authorized project representatives.

SHEET
DRAIN WASTE AND VENT PLAN

SHEET NUMBER
P-101

6/21/2024 10:21:27 AM Autodesk Docs://AL_05772_Valley_2024_2_BTS/05772_Valley_PLB.rvt
40-LS-05772-P-101-DRAIN WASTE AND VENT PLAN

ELECTRICAL SITE PLAN KEYNOTES

1. FIELD COORDINATE LOCATION OF PRIMARY UNDERGROUND ELECTRICAL UTILITY LINES: PROVIDE THREE 4", SCH. 40 PVC CONDUIT TO UTILITY SOURCE, AT MINIMUM 36" BELOW FINISHED GRADE AND IN ACCORDANCE WITH UTILITY COMPANY REQUIREMENTS. COORDINATE ALL REQUIREMENTS WITH THE UTILITY COMPANY PRIOR TO BID.
2. PROPOSED LOCATION OF PAD MOUNTED TRANSFORMER FURNISHED BY THE ELECTRICAL UTILITY COMPANY. THE ELECTRICAL CONTRACTOR SHALL PROVIDE CONCRETE PAD FOR IN ACCORDANCE WITH UTILITY COMPANY REQUIREMENTS.
3. FIELD COORDINATE LOCATION OF SECONDARY UNDERGROUND ELECTRICAL UTILITY LINES: PROVIDE SECONDARY SERVICE LATERAL FROM UTILITY TRANSFORMER TO PANEL 'MDP' VIA THE CURRENT TRANSFORMER CABINET. SEE SHEET E-701, "SINGLE-LINE DIAGRAM". REFER TO "ELECTRICAL SERVICE LATERAL CONDUIT DETAIL", SHEET E-502, FOR ADDITIONAL INFORMATION.
4. LOCATION OF TERMINATION OF SECONDARY SERVICE LATERAL AT PANEL 'MDP'. REFER TO "SINGLE-LINE DIAGRAM" ON SHEET E-701 FOR ADDITIONAL INFORMATION.
5. A. PROVIDE TWO 3" SCH. 40 PVC CONDUIT (ONE IS A SPARE), MINIMUM 24" BELOW FINISHED GRADE, FOR TELEPHONE SERVICE FROM TELEPHONE UTILITY SOURCE TO JUNCTION BOX INSIDE THE BUILDING. REFER TO SHEET E-401 FOR LOCATION OF JUNCTION BOX IN SERVICE AREA. REFER TO "TELEPHONE SERVICE CONDUIT DETAIL", SHEET E-502, FOR ADDITIONAL INFORMATION. COORDINATE EXACT LOCATION OF UTILITY SOURCE WITH TELEPHONE UTILITY. TERMINATE CONDUITS AT UTILITY SOURCE AS REQUIRED BY THE UTILITY COMPANY.

   B. PROVIDE ONE 3" SCH. 40 PVC CONDUIT, MINIMUM 24" BELOW FINISHED GRADE, FOR ISP SERVICE FROM UTILITY SOURCE TO JUNCTION BOX INSIDE THE BUILDING. REFER TO SHEET E-401 FOR LOCATION OF JUNCTION BOX IN BUILDING. REFER TO "TELEPHONE SERVICE CONDUIT DETAIL", SHEET E-502, FOR ADDITIONAL INFORMATION. COORDINATE EXACT LOCATION OF UTILITY SOURCE WITH SERVICE SUPPLY COMPANY. TERMINATE CONDUITS AT AS REQUIRED BY THE UTILITY COMPANY.
6. REFER TO SHEET E-403, E-501, AND E-703 FOR ELECTRICAL REQUIREMENTS AT MENU BOARDS AND DRIVE-THRU CANOPY.
7. LOCATION OF DUMPSTER. REFER TO "REFUSE ENCLOSURE PLAN - ELECTRICAL", SHEET E-403 FOR ELECTRICAL REQUIREMENTS IN THIS AREA.
8. NOT USED.
9. PROVIDE UNDERGROUND CONDUIT TO LOCATION WITHN THE BUILDING FOR POLE MOUNTED SECURITY CAMERA. REFER TO SHEET E-401 FOR LOCATION OF CONDUIT STUB-UP AND REQUIRED SIZE OF CONDUIT. COORDINATE EXACT CAMERA LOCATION WITH CHICK-FIL-A SECURITY SYSTEM REPRESENTATIVE PRIOR TO ROUGH-IN.
10. CONNECT AREA LIGHTING CIRCUITS TO TERMINAL BLOCKS LOCATED IN THE "CFA-T500" CONTROL PANEL (TYPICAL). SEE PANEL SCHEDULES ON SHEET E-602.
11. CONNECT SITE SIGNAGE CIRCUITS TO TERMINAL BLOCKS LOCATED IN THE "CFA-T500" CONTROL PANEL (TYPICAL). SEE PANEL SCHEDULES ON SHEET E-602. COORDINATE LOCATIONS OF ALL SIGNS WITH CHICK-FIL-A SIGNAGE PLANS PRIOR TO BID AND PRIOR TO CONDUIT INSTALLATION.
12. PROVIDE GFCI TYPE WEATHERPROOF RECEPTACLE MOUNTED ON MAIN SIGN SUPPORT +14" AFG.
13. PROVIDE WEATHERPROOF 20A SPST TOGGLE SWITCH 18" AFG AND CONNECTION TO MAINTENANCE DISCONNECT SWITCH FOR MAIN I.D. SIGN.
14. PROPOSED LOCATION OF PEDESTAL MOUNTED ELECTRICAL UTILITY METER. METER BASE WILL BE FURNISHED BY THE UTILITY COMPANY AND INSTALLED BY THE CONTRACTOR. THE CURRENT TRANSFORMER SHALL BE LOCATED IN THE TRANSFORMER COMPARTMENT. THE CONTRACTOR SHALL ALSO FURNISH AND INSTALL A 1-1/4" RIGID GALVANIZED CONDUIT BETWEEN METER BASE AND CURRENT TRANSFORMER COMPARTMENT. COORDINATE LOCATIONS AND REQUIREMENTS WITH ELECTRIC UTILITY COMPANY PRIOR TO BID.
15. LOCATION OF A 360 DEGREE BUILDING MOUNTED EXTERIOR CAMERA (BY OTHERS). PROVIDE A 3/4" CONDUIT AT 9'-4" AFF TO AN EXTERIOR WALL MOUNTED WP JUNCTION BOX WITH THE CONDUIT ABOVE THE INTERIOR CEILING AND EXTENDED TO AN ACCESSIBLE CEILING AREA FOR CAMERA CABLES BY OTHERS.
16. PROVIDE AN EXTERIOR DUPLEX 120V, 20A RECEPTACLE AT 18"AFF WITH 'IN-USE' STYLE LOCKABLE WP COVER AND CONNECT TO A GENERAL PURPOSE 120V RECEPTACLE CIRCUIT.

GENERAL ELECTRICAL SITE PLAN NOTES

A. VERIFY WITH LOCAL AUTHORITIES AND UTILITIES THAT OWNER'S SIGNS, POLES, AND THEIR APPURTENANCES ARE NOT LOCATED ON OR OVER ANY EASEMENT OR MUNICIPAL RIGHT OF WAY.

B. SITE WORK, UTILITY, AND ROADWAY INFORMATION ARE TAKEN FROM BOUNDARY AND TOPO SURVEY SITE PLANS. REFER TO C-DRAWINGS.

C. MINIMUM CONDUIT SIZE SHALL BE 3/4"C. MINIMUM CONDUCTOR SIZE SHALL BE #10AWG COPPER UNLESS OTHERWISE NOTED.

D. REFER TO BUILDING ELECTRICAL DRAWINGS FOR EXTERIOR LIGHTING CONTROL.

E. FOR WORK UNDER THIS DIVISION, ELECTRICAL CONTRACTOR SHALL PROVIDE AND INSTALL ONLY NEW AND U.L. LABELED ELECTRICAL EQUIPMENT, UNLESS INDICATED OTHERWISE BY THE CONTRACT DOCUMENTS.

F. FOR WORK UNDER THIS DIVISION, ELECTRICAL CONTRACTOR SHALL CONTACT ALL UTILITIES FOR VERIFICATION AND IDENTIFICATION OF ALL UNDERGROUND RUNS, PRIOR TO SITE TRENCHING ("CALL BEFORE YOU DIG").

G. FOR WORK UNDER THIS DIVISION, ELECTRICAL CONTRACTOR SHALL PERFORM ALL WORK IN STRICT ACCORDANCE WITH THE CURRENT EDITION OF THE NATIONAL ELECTRIC CODE (NFPA 70), AND THE LIFE SAFETY CODE (NFPA 101), AS ADOPTED AND/ OR AMENDED BY STATE AND LOCAL AUTHORITIES HAVING JURISDICTION.

H. FOR WORK UNDER THIS DIVISION, ELECTRICAL CONTRACTOR SHALL COORDINATE AND FIELD VERIFY LOCATIONS OF ALL UTILITY SERVICE RUNS, ORIGINATIONS, TERMINATIONS AND ANY INSTALLATION REQUIREMENTS (i.e. ELECTRICAL, TELEPHONE, WATER, GAS, SEWAGE, ETC.), AS RELATED TO THIS JOB, OR THEREBY EFFECTED.

I. REFER TO SHEETS E-001, & E-002 FOR ELECTRICAL SPECIFICATIONS PERTAINING TO ELECTRICAL WORK DESCRIBED ON THIS SHEET.

J. REFER TO SHEET E-102 FOR AREA LIGHTING FIXTURE SCHEDULE AND SHEET E-103 FOR BUILDING LIGHTING FIXTURE SCHEDULE.

ELECTRICAL SITE PLAN SYMBOLS

SYMBOL	DESCRIPTION (UNLESS OTHERWISE NOTED ON PLANS)
T	UTILITY COMPANY TRANSFORMER, (208 VOLT, 3 PHASE, 4 WIRE SECONDARY)
$	S.P.S.T. LIGHT SWITCH (600V AC QUIET TYPE)
GF	GROUND FAULT CIRCUIT INTERRUPTER DUPLEX RECEPTACLE
	CONDUIT HOMERUN TO PANEL
J	JUNCTION BOX (SINGLE GANG STEEL WHERE WALL MOUNTED, 4" SQ. STEEL WHERE CEILING MOUNTED, UNLESS NOTED OTHERWISE)
	CONDUIT BURIED BELOW GRADE
	POLE MOUNTED SITE LIGHTING FIXTURE. CHEVRON INDICATES DIRECTION OF PRIMARY LIGHT DISTRIBUTION.

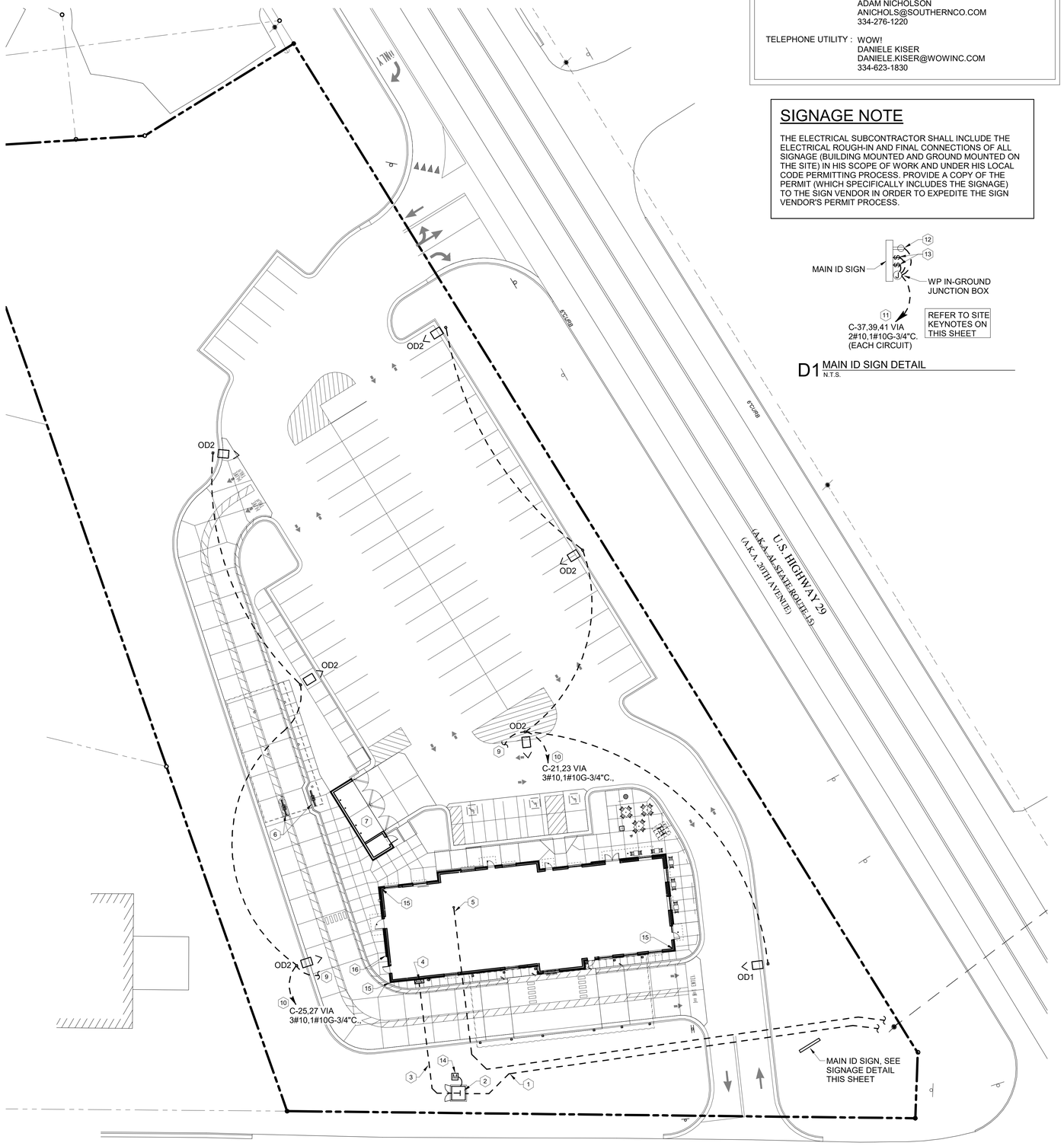

A1 ELECTRICAL SITE PLAN
1" = 20'-0"

20' 10' 0' 20' 40'

POWER/TELEPHONE UTILITIES:

COORDINATE AND COMPLY WITH ALL TELEPHONE AND ELECTRICAL UTILITY REQUIREMENTS. THE FOLLOWING PERSONS SHALL BE CONTACTED FOR SPECIFIC UTILITY COMPANY REQUIREMENTS:

ELECTRICAL UTILITY: ALABAMA POWER COMPANY
ADAM NICHOLSON
ANICHOLS@SOUTHERNCO.COM
334-276-1220

TELEPHONE UTILITY : WOW!
DANIELE KISER
DANIELE.KISER@WOWINC.COM
334-623-1830

SIGNAGE NOTE

THE ELECTRICAL SUBCONTRACTOR SHALL INCLUDE THE ELECTRICAL ROUGH-IN AND FINAL CONNECTIONS OF ALL SIGNAGE (BUILDING MOUNTED AND GROUND MOUNTED ON THE SITE) IN HIS SCOPE OF WORK AND UNDER HIS LOCAL CODE PERMITTING PROCESS. PROVIDE A COPY OF THE PERMIT (WHICH SPECIFICALLY INCLUDES THE SIGNAGE) TO THE SIGN VENDOR IN ORDER TO EXPEDITE THE SIGN VENDOR'S PERMIT PROCESS.

D1 MAIN ID SIGN DETAIL
N.T.S.

Chick-fil-A
5200 Buffington Road
Atlanta, Georgia
30349-2998

Kurzynske & Associates
2705 Lebanon Pike - Suite One
Nashville, Tennessee 37214
Telephone: (615) 255-5203

ALABAMA REGISTERED PROFESSIONAL ENGINEER NO. 30714 MARK T. KURZYNSKE
06/21/24

CHICK-FIL-A VALLEY, AL

3215 20TH AVENUE
VALLEY, AL 36854

FSR#05772

BUILDING TYPE / SIZE: BTS LS
RELEASE:
PRINTED FOR
CONSTRUCTION

REVISION SCHEDULE

NO.	DATE	DESCRIPTION

CONSULTANT PROJECT #	24035.CC.S
DATE	03/27/2024
DRAWN BY	ES

Information contained on this drawing and in all digital files produced for above named project may not be reproduced in any manner without express written or verbal consent from authorized project representatives.

SHEET
SITE LIGHTING AND POWER PLAN

SHEET NUMBER
E-101

ELECTRICAL KEYNOTES

117 CEILING LIGHT PROVIDED BY CANOPY SUPPLIER AND INSTALLED BY E.C.

118 (2) 2" UNDERGROUND SCH40 PVC CONDUIT FOR MENU BOARD FIBER. PROVIDE PULL STRING. STUB UP INTO ACCESSIBLE CEILING SPACE AT DTT CLOSET OR OFFICE IF NO DTT CLOSET.

119 AIR CIRCULATING FAN (WITH INTEGRAL ON-OFF SWITCH) PROVIDED BY OTHERS. PROVIDE A DUPLEX OUTLET (WITH IN-USE COVER PLATE) FLUSH MOUNTED IN CUT-OUT AT TOP OF COLUMN FOR FAN'S PLUG AND CORD. OUTLET TO BE ON DOWNSTREAM SIDE OF COLUMN AND AWAY FROM ONCOMING VEHICLES' VIEW.

120 INFRARED GAS HEATER WITH INTEGRAL ON-OFF SWITCH PROVIDED BY OTHERS.

121 MENUBOARD PROVIDED BY OTHERS.

122 PROVIDE IN-GROUND QUAZITE PULLBOX FOR MLOP DATA CABLES WITH POWER NEMA 3R JUNCTION BOX MOUNTED INSIDE THE PULLBOX.

123 2" UNDERGROUND SCH40 PVC CONDUIT WITH POWER CIRCUITS, SEE WIRING SCHEMATIC.

124 2" EMPTY UNDERGROUND SCH40 PVC CONDUIT FOR OWNER'S DETECTOR LOOP CABLES. EXTEND CONDUITS UP INTO ACCESSIBLE CEILING SPACE ABOVE THE HME BOX IN THE DRIVE THRU AREA.

125 1" EMPTY UNDERGROUND SCH40 PVC CONDUIT FOR OWNER'S AUDIO SYSTEM/DETECTOR LOOP CABLES.

126 INSTALL UNDERGROUND 3" SCH40 PVC CONDUIT UP INTO THE CANOPY COLUMN WITH TYPE MC CABLE (GALVANIZED STEEL WITH PVC JACKET) RUN WITHIN FOR THE 120V POWER FOR LIGHTS, 120 VOLT POWER FOR FANS, AND 24 VOLT POWER FOR THE INFRARED GAS HEATERS.

127 2" CONDUIT FROM DRIVE-THRU MENU BOARD TO DUMPSTER ENCLOSURE ROOM FOR WIFI AND CAMERA CABLES.

128 PROVIDE ONE DUPLEX GFCI (WITH IN-USE WP COVER PLATE), TWO 120V SINGLE-POLE SWITCHES (EACH WITH HUBBELL #RW51550 WP COVER PLATE), AND ONE DUPLEX SINGLE-POLE SWITCH (WITH HUBBELL #RW51470 WP COVER PLATE) MOUNTED ON THE COLUMN IN B12 PLATES TO BE FIELD PAINTED MATTE BLACK.

129 ALL CONDUIT AND BOXES SHALL BE CONCEALED FROM NORMAL VIEW; UNDERGROUND, IN COLUMNS, OR ABOVE THE CANOPY (ON THE ROOF). MC CABLE (GALVANIZED STEEL WITH PVC JACKET) TO BE USED INSIDE THE COLUMNS; BUT MUST CONVERT BACK TO IMC ABOVE THE ROOF. REFER TO THE MECHANICAL DRAWINGS FOR LOCATIONS OF GAS PIPING ABOVE THE ROOF AND INSTALL CONDUIT ALONG THE SAME LOCATIONS USING THE SAME PIPE STAND FOR PIPING AND CONDUIT. ALL EXPOSED ELECTRICAL BOXES TO BE NEMA 3R CAST-METAL.

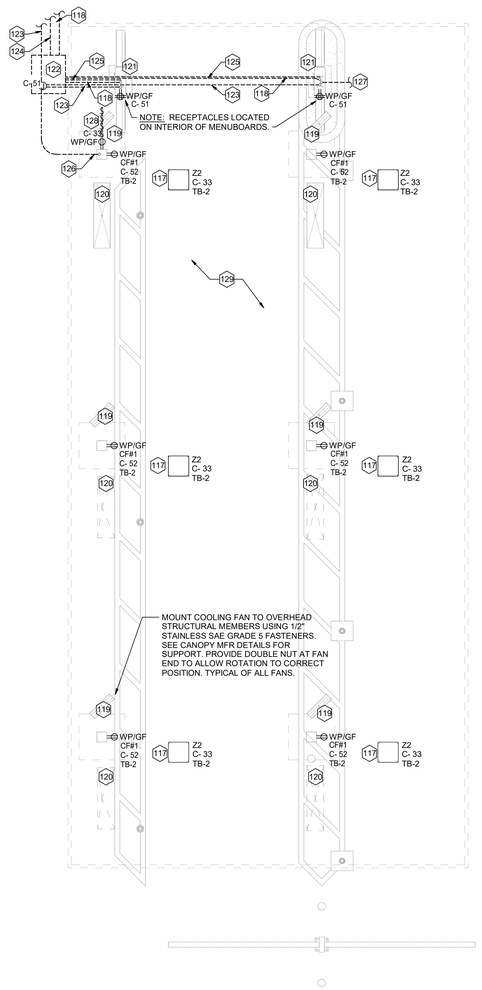

A2 MLOP ORDER CANOPY POWER PLAN
1/4" = 1'-0"

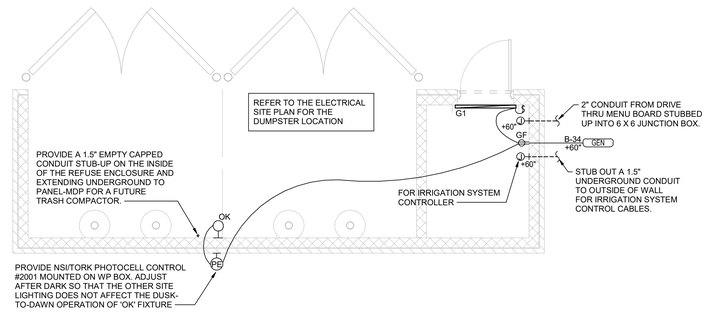

C1 REFUSE ENCLOSURE ELECTRICAL PLAN
1/4" = 1'-0"

Chick-fil-A
5200 Buffington Road
Atlanta, Georgia
30349-2998

Kurzynske & Associates
2705 Lebanon Pike - Suite One
Nashville, Tennessee 37214
Telephone: (615) 255-5203

ALABAMA REGISTERED PROFESSIONAL ENGINEER MARK T. KURZYNSKE
06/21/24

CHICK-FIL-A
VALLEY, AL

3215 20TH AVENUE
VALLEY, AL 36854

FSR#05772

BUILDING TYPE / SIZE: BTS LS BP
RELEASE: 23.09
PRINTED FOR
CONSTRUCTION

REVISION SCHEDULE

NO.	DATE	DESCRIPTION

CONSULTANT PROJECT # 24035.CC.S
DATE 03/27/2024
DRAWN BY ES

Information contained on this drawing and in all digital files produced for above named project may not be reproduced in any manner without express written or verbal consent from authorized project representatives.

SHEET
ORDER CANOPY PLAN AND REFUSE ENCLOSURE

SHEET NUMBER
E-403

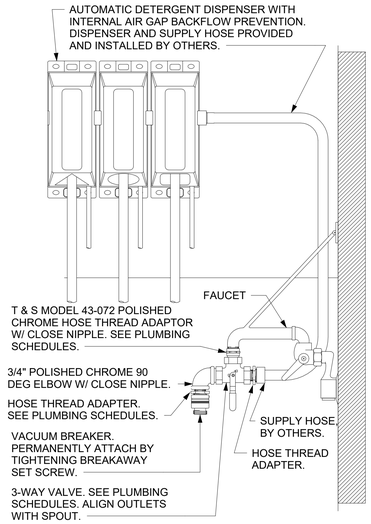

1 3-WAY VALVE AT MOP SINK
NOT TO SCALE

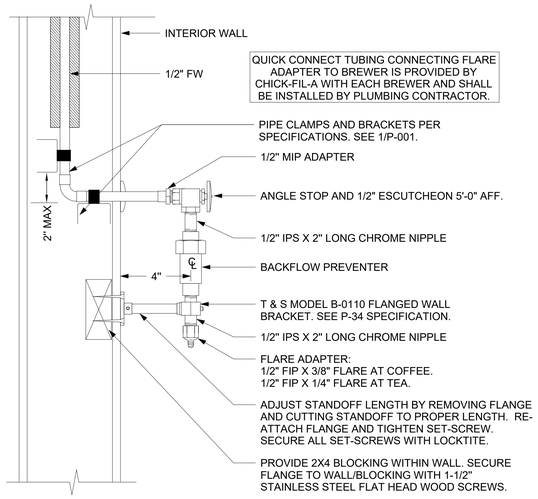

2 COFFEE & TEA BREWER STOP & BFP
1/4" = 1'-0"

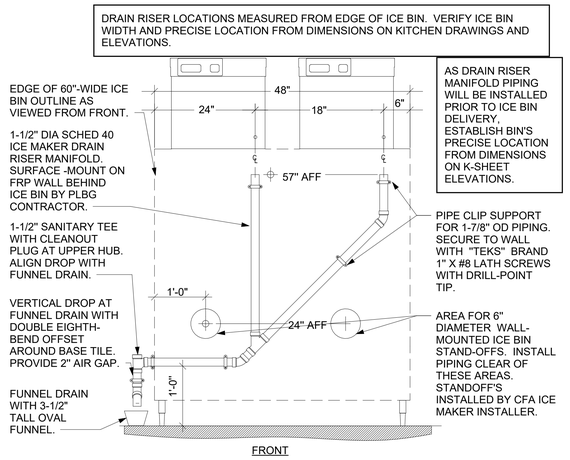

3 ICE MAKER DRAIN ON WALL
NOT TO SCALE

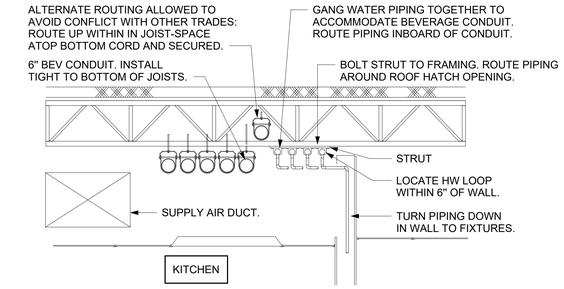

4 SECTION AT WET WALL
NOT TO SCALE

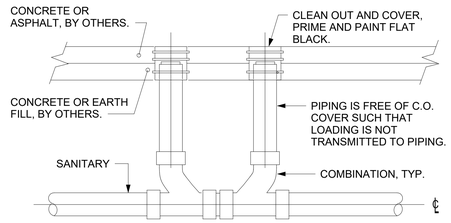

5 SAN. C.O. OUTSIDE BUILDING
NOT TO SCALE

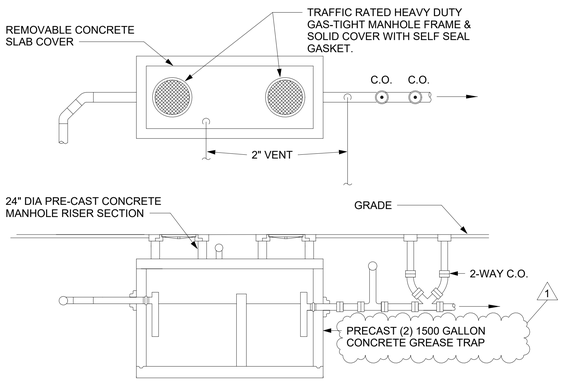

6 GREASE INTERCEPTOR
NOT TO SCALE

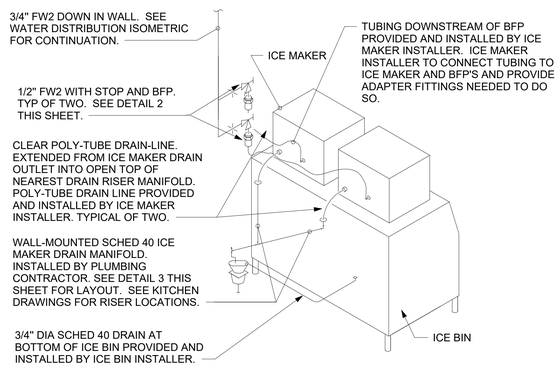

7 ICE MACHINE PIPING
NOT TO SCALE

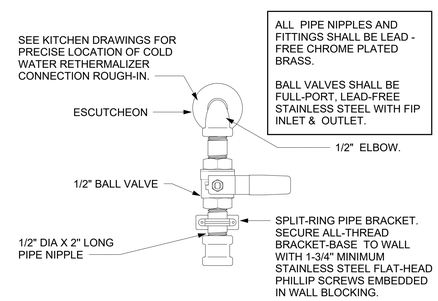

COORDINATE WALL BLOCKING LOCATION WITH GENERAL CONTRACTOR.

GENERAL CONTRACTOR TO PROVIDE AND INSTALL WALL BLOCKING, SEE DETAIL 11/P-501.

8 RETHERMALIZER SUPPLY VALVE
NOT TO SCALE

CO2 FILL BOX, FILL TUBING, AND VENT LINE SET FURNISHED BY CHICK-FIL-A AND FURNISHED BY GC. GC TO COORDINATE REQUIRED LENGTH OF TUBING AND LINE SET FROM FILL BOX TO TANK LOCATION WITH TMS; LENGTH NOT TO EXCEED 100 FT. FINAL CONNECTION BY CO2 VENDOR.

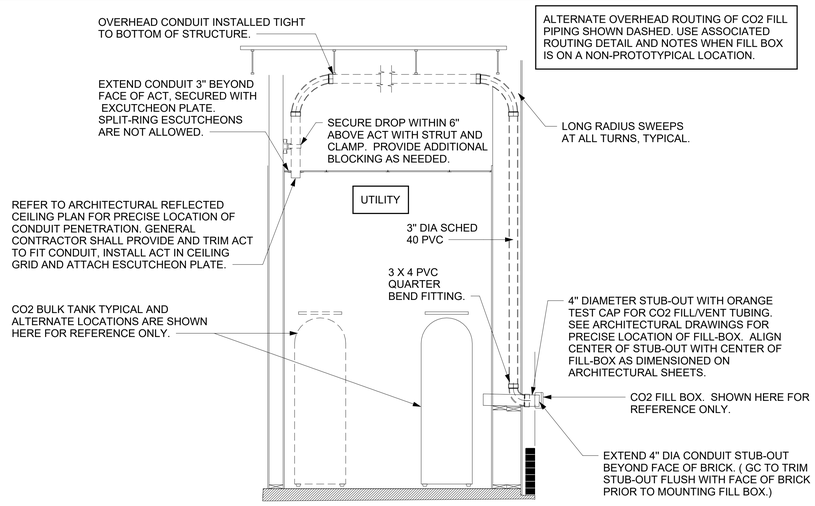

9 CO2 FILL/VENT CONDUIT AND FILL-BOX INSTALLATION
NOT TO SCALE

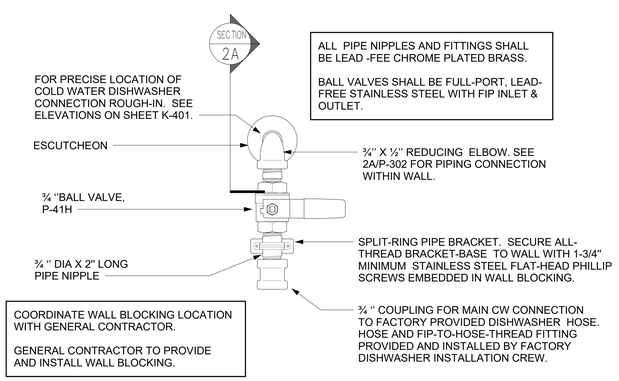

COORDINATE WALL BLOCKING LOCATION WITH GENERAL CONTRACTOR.

GENERAL CONTRACTOR TO PROVIDE AND INSTALL WALL BLOCKING.

10 DISHWASHER SUPPLY VALVE ASSEMBLY-HOBART
NOT TO SCALE

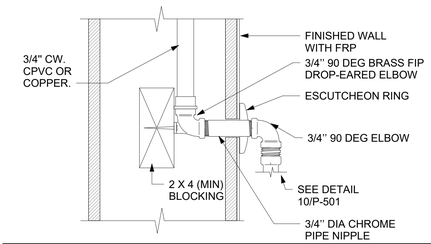

SECURE DROP-EARED ELBOW TO BLOCKING WITH 1-1/4" FLAT HEAD PHILLIP SCREWS.

11 SECTION AT PIPNG WITHIN WALL
NOT TO SCALE

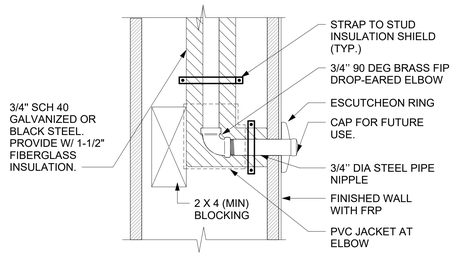

12 DARPRO OIL PIPING SECTION WITHIN WALL
NOT TO SCALE

Chick-fil-A
5200 Buffington Road
Atlanta, Georgia
30349-2998

Kurzynske & Associates
2705 Lebanon Pike - Suite One
Nashville, Tennessee 37214
Telephone: (615) 255-5203

ALABAMA REGISTERED PROFESSIONAL ENGINEER NO. 20714 MARK T. KURZYNSKE
06/21/24

CHICK-FIL-A
VALLEY, AL

3215 20th Avenue
VALLEY, AL 36854

FSR#05772

BUILDING TYPE / SIZE: BTS LS BP
RELEASE: 23.09
PRINTED FOR
CONSTRUCTION

REVISION SCHEDULE

NO.	DATE	DESCRIPTION
1	05/17/2024	Grease Trap

CONSULTANT PROJECT #	24035.CC.S
DATE	03/20/2024
DRAWN BY	CH

Information contained on this drawing and in all digital files produced for above named project may not be reproduced in any manner without express written or verbal consent from authorized project representatives.

SHEET
PLUMBING DETAILS

SHEET NUMBER
P-501

6/21/2024 10:21:36 AM Autodesk Docs://AL_05772_Valley_2024 2_BTS/05772_Valley_PLB.rvt
40-LS-05772-P-501-PLUMBING DETAILS

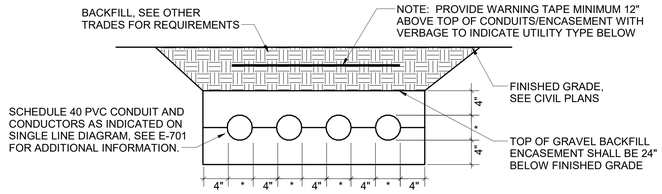

NOTE:
WHERE THE SECONDARY CONDUITS FROM THE UTILTY TRANSFORMER TO THE CURRENT TRANSFORMER CABINET (OR MAIN PANELBOARD) ARE FURNISHED BY THE UTILITY COMPANY (FOR INSTALLATION BY THE CONTRACTOR) OR ARE FURNISHED AND INSTALLED BY THE UTILITY COMPANY, THE CONTRACTOR SHALL COORDINATE ALL REQUIREMENTS WITH THE UTILITY COMPANY PRIOR TO BID. REFER TO THE ELECTRICAL SITE PLAN FOR ADDITIONAL INFORMATION.

E1 ELECTRICAL SERVICE LATERAL CONDUIT DETAIL
N.T.S.

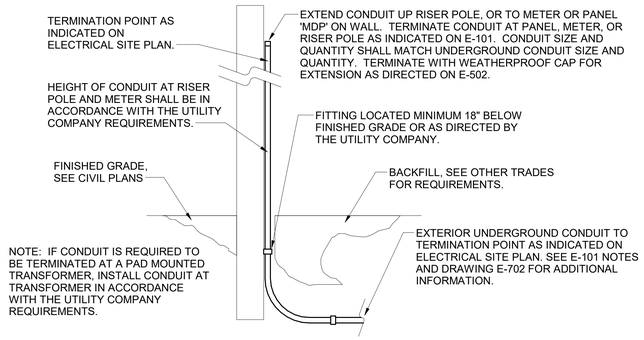

C1 EXTERIOR CONDUIT TURN UP DETAIL
N.T.S.

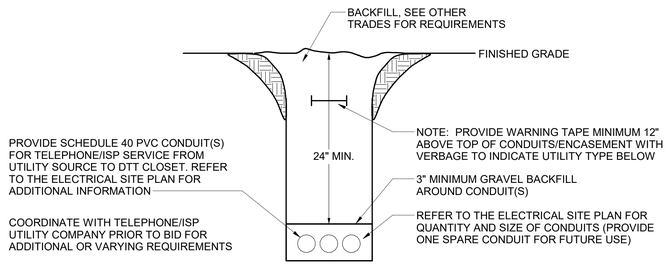

B1 TELEPHONE/ISP SERVICE CONDUIT DETAIL
N.T.S.

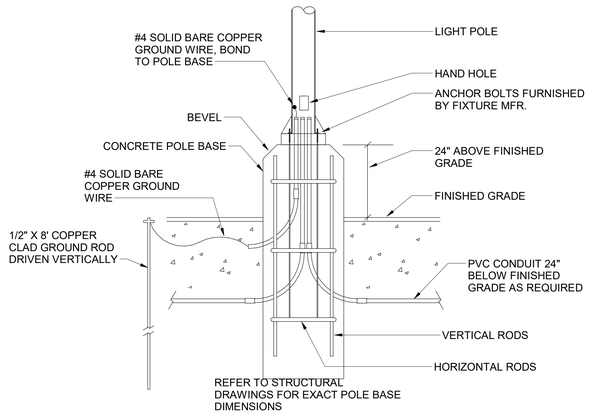

A1 TYPICAL CONCRETE BASE POLE DETAIL
N.T.S.

Chick-fil-A
5200 Buffington Road
Atlanta, Georgia
30349-2998

Kurzynske & Associates
2705 Lebanon Pike - Suite One
Nashville, Tennessee 37214
Telephone: (615) 255-5203

ALABAMA REGISTERED PROFESSIONAL ENGINEER MARK T. KURZYNSKE
06/21/24

CHICK-FIL-A VALLEY, AL

3215 20TH AVENUE
VALLEY, AL 36854

FSR#05772

BUILDING TYPE / SIZE: BTS LS
RELEASE:
PRINTED FOR
CONSTRUCTION

REVISION SCHEDULE

NO.	DATE	DESCRIPTION

CONSULTANT PROJECT #	24035.CC.S
DATE	03/27/2024
DRAWN BY	ES

Information contained on this drawing and in all digital files produced for above named project may not be reproduced in any manner without express written or verbal consent from authorized project representatives.

SHEET
SITE DETAILS

SHEET NUMBER
E-502

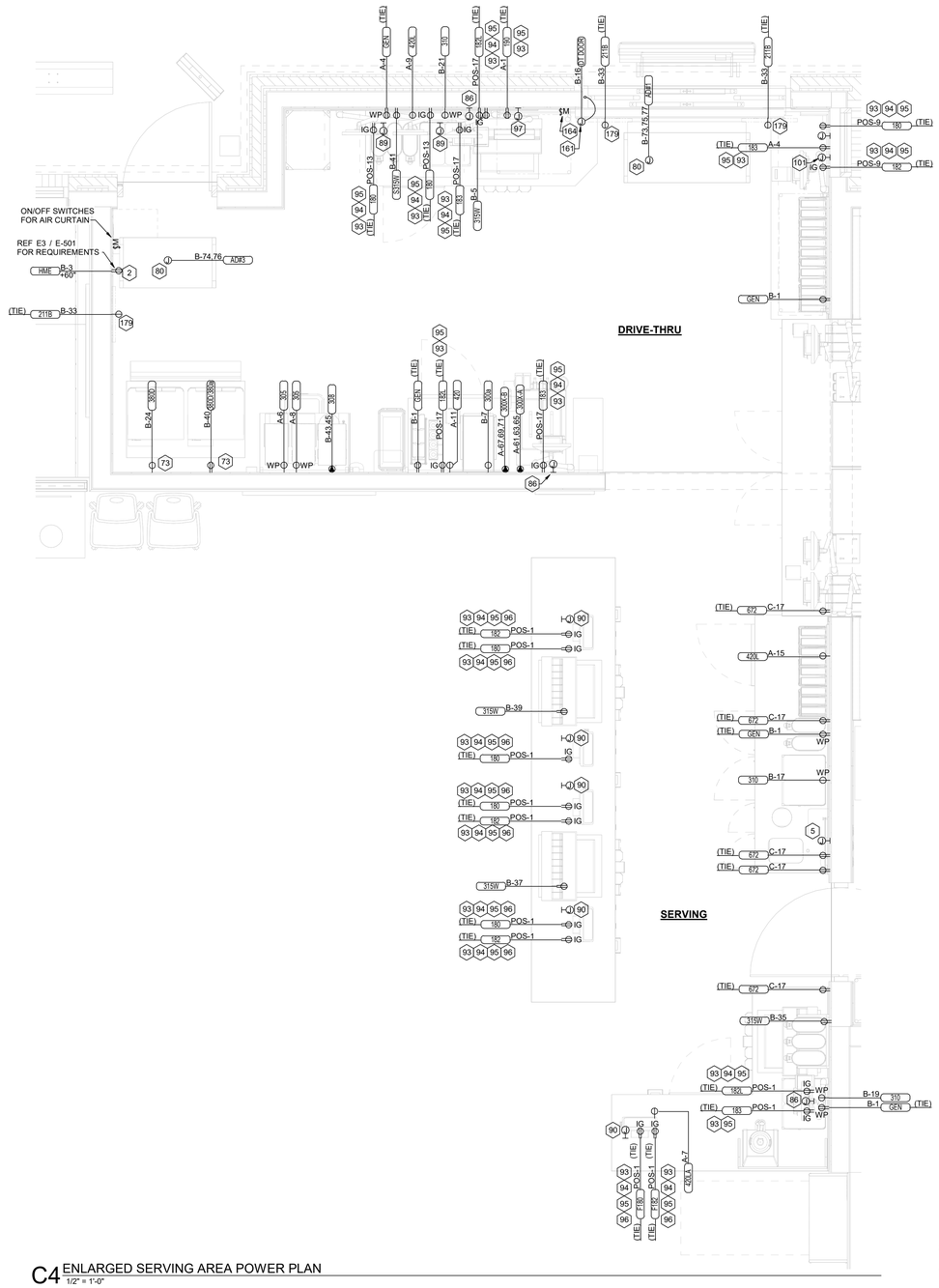

C4 ENLARGED SERVING AREA POWER PLAN
1/2" = 1'-0"

NOTE FOR POS GF IN KITCHEN:
THE CONTRACTOR SHALL PROVIDE GROUND FAULT PROTECTION FOR ALL 120 VOLT, 15 AND 20 AMP ISOLATED GROUND RECEPTACLE OUTLET BRANCH CIRCUITS IN THE KITCHEN/FOOD PREPARATION AREAS. GROUND FAULT PROTECTION SHALL BE PROVIDED AT THE BREAKER VIA A GROUND FAULT TYPE BRANCH BREAKER. (GFCI TYPE ISOLATED GROUND RECEPTACLES ARE NOT AVAILABLE.)

NOTE FOR GF TYPE RECEPTACLES IN KITCHEN/FOOD PREP AREAS:
THE CONTRACTOR SHALL PROVIDE GROUND FAULT CIRCUIT INTERRUPTER PROTECTION FOR PERSONNEL FOR ALL 125V - 250V RECEPTACLES SUPPLIED BY 120V SINGLE-PHASE BRANCH CIRCUITS 50 AMPS OR LESS, 208V SINGLE-PHASE BRANCH CIRCUITS 50 AMPS OR LESS, AND 208V THREE-PHASE BRANCH CIRCUITS 100 AMPS OR LESS. SEE FLOOR PLANS FOR ADDITIONAL INFORMATION.

NOTE:
RECEPTACLES FOR THE POS EQUIPMENT SHALL BE THE ONLY ITEMS THAT CONNECT TO PANEL-POS. THERE SHALL BE NO OTHER LOADS CONNECTED TO THIS ISOLATED GROUND PANEL AND, IF SO, SHALL BE REMOVED AND RECONNECTED TO ANOTHER PANELBOARD AT THE EXPENSE OF THE CONTRACTOR.

ELECTRICAL KEYNOTES

2 PROVIDE JUNCTION BOX, LESS COVER PLATE, AND EXTEND 1-1/2" CONDUIT UP IN WALL TO ABOVE CEILING FOR INSTALLATION OF WIRELESS COMMUNICATION CONTROL UNIT.

4 PROVIDE SINGLE-GANG JUNCTION BOX WITH A 1" EMPTY CONDUIT STUBBED UP INTO THE ACCESSIBLE CEILING SPACE FOR OWNER'S VOIP PHONE JACK AND CABLES.

5 PROVIDE SINGLE-GANG JUNCTION BOX WITH A 3/4" EMPTY CONDUIT STUBBED UP INTO THE ACCESSIBLE CEILING SPACE FOR THE DIGITAL MENU BOARD MEDIA ENGINE CABLES.

37 PROVIDE JUNCTION BOX WITH STAINLESS STEEL COVER PLATE AND 3/4" HOLE IN PLATE WITH GROMMET ON HOLE IN PLATE. EXTEND 3/4" CONDUIT UP IN WALL TO ABOVE CEILING FOR MUSIC SYSTEM.

39 THREE SINGLE GANG EXTRA DEEP J-BOXES STACKED WITH A 1/2" CONDUIT FROM EACH TO THE TOP J-BOX BOX AND A 1" CONDUIT STUBBED INTO THE CEILING SPACE FOR MUSIC SYSTEM VOLUME CONTROLS PROVIDED BY OWNER'S VENDOR.

40 PROVIDE A SINGLE GANG EXTRA DEEP JUNCTION BOX AT 74" AFF WITH 1/2" CONDUIT STUBBED INTO THE CEILING SPACE FOR MUSIC SYSTEM VOLUME CONTROLS.

55 PROVIDE EDWARDS #340-4N5 VIBRATING 4" DIAMETER BELL. THE BELL SHALL BE RATED AT 120 VOLTS.

56 PROVIDE A 120 VOLT WEATHERPROOF DOORBELL PUSHBUTTON AT DOOR. PUSHBUTTON SHALL BE FLUSH MOUNTED. PROVIDE DORTRONICS SYSTEMS #W5286-P25 CLEAR ANODIZED ALUMINUM PUSHBUTTON WITH SINGLE GANG SWITCHPLATE.

57 TWO 2" TELEPHONE SERVICE ENTRANCE CONDUIT(S). EXTEND WITH PULL STRING FROM TELEPHONE SERVICE J-BOX TO THE UTILITY SOURCE. REFER TO THE ELECTRICAL SITE PLAN FOR ADDITIONAL INFORMATION.

61 SB6000 PANEL ENCLOSURE WITH 3 LITTLEFUSE SHOCKBLOCK GFCI PROTECTION DEVICES, SB6100 SHOCK BLOCK GFCI PROTECTION DEVICE, AND SB5000 SHOCK BLOCK GFCI PROTECTION DEVICE. ENSURE CONDUITS ARE INSTALLED FOR LINE AND LOAD WIRES TO BE INSTALLED WITH PROPER WIRE BENDING SPACE. LABEL EACH SHOCK BLOCK WITH PANEL AND CIRCUIT NUMBER IT CONTROLS.

62 ONE 3" ISP SERVICE CONDUIT. EXTEND WITH PULL STRING FROM J-BOX TO SUPPLIER'S SOURCE, REFER TO ELECTRICAL SITE PLAN FOR ADDITIONAL INFORMATION.

64 PROVIDE TWO 6"H X 6"W X 4"D J-BOXES (ONE FOR TELEPHONE AND ONE FOR ISP) AT 6'-6" AFF AND EXTEND A 2" CONDUIT WITH PULL STRING IN THE WALL FROM EACH J-BOX INTO THE ACCESSIBLE CEILING SPACE. PROVIDE A 36" X 36" X 3/4" PLYWOOD BACKBOARD ON THE WALL ABOVE THE J-BOXES (AT THE CEILING) FOR USE BY THE ISP. PROVIDE A COPPER GROUND BAR (EQUAL TO ERICO TGBA24L14P) AT THE BOTTOM OF THE BACKBOARD WITH A #6 AWG INSULATED CU GROUNDING CONDUCTOR IN A 3/4"C FROM THE GROUND BAR TO THE INTER SYSTEM BONDING TERMINATION NEXT TO THE SERVICE ENTRANCE. THE GROUND BAR SHALL HAVE TAPS FOR USE BY THE TELEPHONE AND ISP UTILITY COMPANIES AND FOR THE #6 COMMUNICATIONS GROUNDING CONDUCTOR TO THE GES. PROVIDE A 15 AMP ISOLATED GROUND (IG) ORANGE-FACED DUPLEX RECEPTACLE IN THE WALL BESIDE THE BACKBOARD AND LABEL THE RECEPTACLE "FOR FIBER TO CABLE MODEM USE ONLY". BOND NETWORK RACKS TO GROUND BAR.

65 PROVIDE JUNCTION BOX AT 8'-0" AFF WITH CONDUIT AND CONDUCTORS TO PANELBOARD FOR FUTURE CONNECTION TO BOOSTER PUMP. REFER TO THE PLUMBING DRAWINGS FOR ADDITIONAL INFORMATION.

73 SEE THE ELECTRICAL ROOF PLAN FOR THE LOCATION OF THE ICE MAKER CONDENSERS AND ANY ADDITIONAL REQUIREMENTS.

80 JUNCTION BOX ABOVE CEILING FOR AIR CURTAIN.

85 PROVIDE A 'RETROFIT' DOUBLE GANG RING (CARLON #SC200RR) FOR OWNER'S DEVICE PLATE WITH A 1 1/4" EMPTY CONDUIT AT THE OPENING STUBBED UP INTO THE CEILING SPACE FOR OWNER'S DATA CABLES.

86 PROVIDE SINGLE-GANG JUNCTION BOX WITH A 1" CONDUIT EXTENDING UP INTO THE CEILING SPACE FOR POS MONITOR(S). COVER PLATE PROVIDED BY OWNER'S POS SYSTEM VENDOR.

88 PROVIDE A 'RETROFIT' SINGLE GANG RING (CARLON #SC100RR) FOR OWNER'S DEVICE PLATE WITH A 1" EMPTY CONDUIT AT THE OPENING STUBBED UP INTO THE CEILING SPACE FOR OWNER'S DATA CABLES.

89 PROVIDE SINGLE-GANG JUNCTION BOX WITH A 1" CONDUIT EXTENDING UP INTO THE CEILING SPACE FOR POS TERMINAL. POS SYSTEM SUPPLIER WILL PROVIDE COVER PLATE ON BOX.

90 PROVIDE SINGLE-GANG EXTRA DEEP JUNCTION BOX MOUNTED ON THE MOUNTING PLATE WITHIN THE FRONT SERVING COUNTER CASEWORK. MOUNT BOX ADJACENT TO THE RECEPTACLE FOR EQUIPMENT 180. DO NOT MOUNT BOX BETWEEN EQUIPMENT 180 AND EQUIPMENT 182 RECEPTACLES.

93 PROVIDE ORANGE ISOLATED GROUND (IG) DUPLEX RECEPTACLE.

94 PROVIDE GROUND FAULT PROTECTION FOR THESE DEVICES VIA A GROUND FAULT CIRCUIT BREAKER IF LOCAL CODE DEFINES THIS A FOOD PREPARATION AREA.

95 USE TYPE MC CABLE FOR THE ISOLATED GROUND CIRCUIT: #12 HOT, NEUTRAL, GREEN GROUND, STRIPED ISOLATED GROUND. EACH 15 AMP HOMERUN SHALL BE DEDICATED TO A CIRCUIT BREAKER VIA DEDICATED CONDUCTORS WITHIN A CABLE ASSEMBLY. ALL MC CABLES SHALL BE RUN OVERHEAD ABOVE THE CEILING AND RACKED TOGETHER ON J-HOOKS. NO SPLICES IN ANY HOMERUN CABLES FROM FIRST RECEPTACLE TO BREAKER.

ELECTRICAL KEYNOTES

96 THE RECEPTACLE BACKBOX AND SYSTEM CABLE JUNCTION BOX FOR ITEMS 180 AND 182 SHALL BE TURNED HORIZONTAL. REFER TO THE KITCHEN EQUIPMENT ROUGH-IN ELEVATIONS FOR ADDITIONAL INFORMATION.

97 PROVIDE SINGLE GANG JUNCTION BOX AND STAINLESS STEEL COVER PLATE WITH 7/8" HOLE IN CENTER FOR VIDEO MONITOR. EXTEND 1" CONDUIT UP IN WALL TO ABOVE ACCESSIBLE CEILING.

98 PROVIDE 4"W X 4"H X 3"D FLUSH JUNCTION BOX WITHOUT A COVERPLATE. EXTEND 2" CONDUIT UP TO ABOVE ACCESSIBLE OFFICE CEILING AREA AND PROVIDE BUSHING ON CONDUIT.

99 PROVIDE 4"W X 4"H X 3" D JUNCTION BOX WITHOUT COVERPLATE AND EXTEND A 2" CONDUIT DOWN THROUGH SLAB AND BELOW GRADE TO EACH OF THE SITE'S POLE MOUNTED CAMERA LOCATIONS (SEE ELECTRICAL SITE PLAN FOR CONTINUATION) AND A 2" CONDUIT UP INTO THE ACCESSIBLE CEILING SPACE WITH A BUSHING ON THE CONDUIT END. PROVIDE A SINGLE-GANG JUNCTION BOX ADJACENT TO THE DOUBLE-GANG BOX WITH A 1.5" CONDUIT DOWN TO A SECOND SINGLE-GANG JUNCTION BOX AT THE CCTV MONITOR LOCATION.

101 PROVIDE SINGLE GANG BOX WITHOUT COVER PLATE FOR RECEIPT PRINTER. EXTEND 1/2" CONDUIT UP IN WALL TO ABOVE ACCESSIBLE CEILING.

135 4" EMPTY CONDUIT FROM 6" ABOVE THE TOP OF THE NETWORK RACK TO ABOVE ACCESSIBLE CEILING.

137 SINGLE GANG JUNCTION BOX AT +72" A.F.F. WITH 3/4" CONDUIT STUB-UP INTO CEILING SPACE FOR TV.

155 LOCATION OF THE INPUT & OUTPUT J-BOXES FOR THE PIB (POWER INTERFACE BOX) PROVIDED BY THE OWNER.

156 AIR CURTAIN WITH MICROSWITCH FURNISED BY MECHANICAL CONTRACTOR.

157 PROVIDE PLUG AND CORDSET.

158 LABEL AS SWITCHED OUTLET.

161 duplicate note - update to 154

164 ON/OFF SWITCH FOR AIR CURTAIN PROVIDED AND INSTALLED BY MECHANICAL CONTRACTOR.

179 PROVIDE SIMPLEX RECEPTACLE FOR THE FLY LIGHT SYSTEM TO THE RIGHT OF THE UNIT LEVEL WITH THE BOTTOM OF THE LIGHT. DO NOT CUT THE CORDSET FURNISHED WITH THE UNIT. INSTEAD, COIL THE CORD ON THE RIGHT SIDE OF THE UNIT.

T6 OCCUPANCY CONTROLLED OUTLET. BOTTOM HALF OF OUTLET SHALL BE CONTROLED VIA LOCAL CEILING MOUNTED OCCUPANCY SENSOR (MCL) AND POWER PACK (PP). TOP HALF OF OUTLET SHALL NOT BE ROUTED THROUGH CONTROLS. CONTRACTOR SHALL PROVIDE COOPER/ARROW HART MODEL #5362 RECEPTACLE.

T7 CEILING MOUNTED LOW VOLTAGE OCCUPANCY SENSOR. ROUTE CONTROLED RECEPTACLES THROUGH SENSOR VIA POWER PACK PP. REFER TO KEYNOTE T5 FOR ADDITIONAL INFOMRATION.

T8 POWER PACK FOR AUTOMATIC RECEPTACLE CONTROLS MOUNTED ABOVE CEILING IN AN ACCESSIBLE LOCATION. CONNECT TO OCCUPANCY SENSOR (MCL). PROVIDE J-BOX FOR PROTECTION.

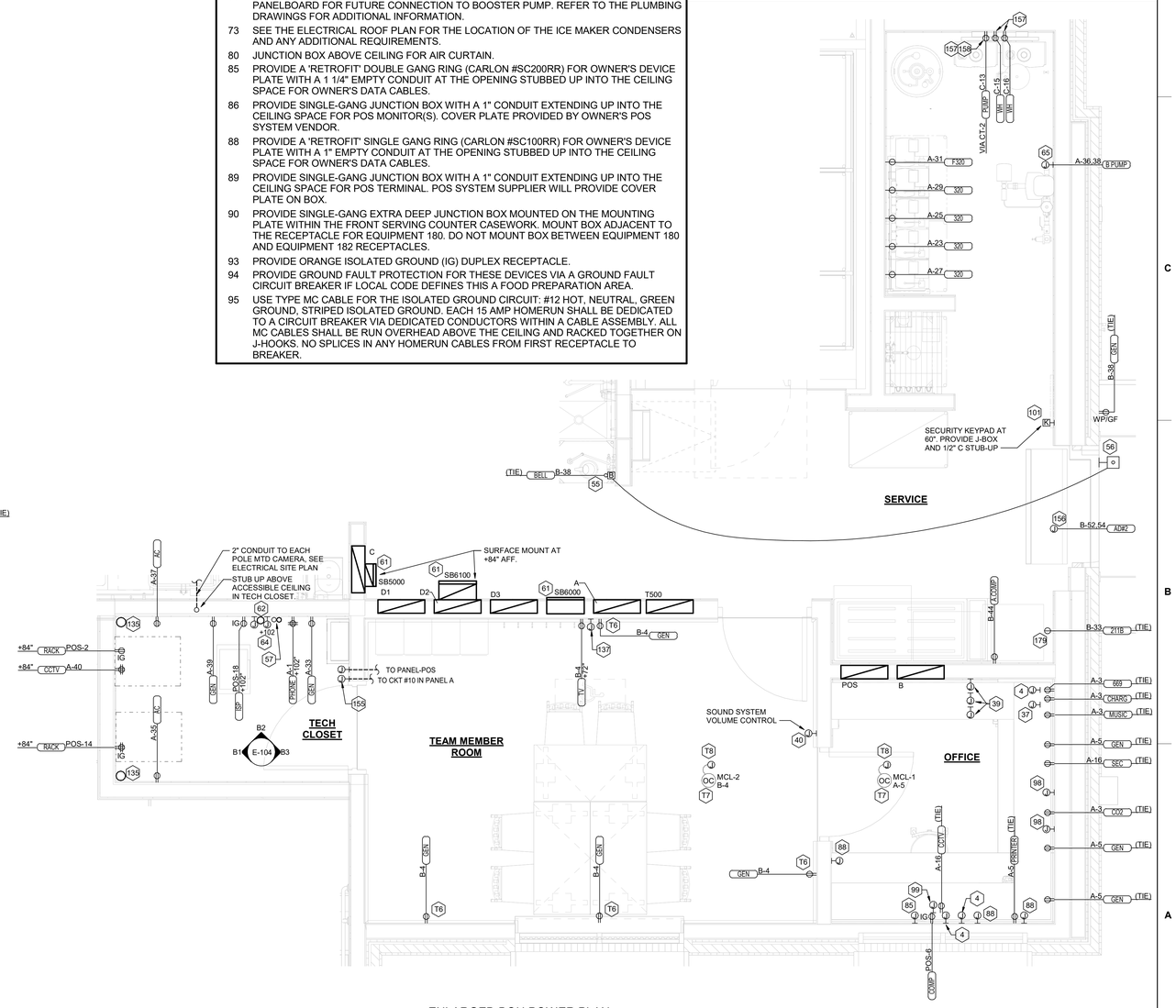

A1 ENLARGED BOH POWER PLAN
1/2" = 1'-0"

Chick-fil-A
5200 Buffington Road
Atlanta, Georgia
30349-2998

Kurzynske & Associates
2705 Lebanon Pike - Suite One
Nashville, Tennessee 37214
Telephone: (615) 255-5203

ALABAMA REGISTERED PROFESSIONAL ENGINEER NO. 30774 MARK T. KURZYNSKE
06/21/24

CHICK-FIL-A
VALLEY, AL

3215 20TH AVENUE
VALLEY, AL 36854

FSR#05772

BUILDING TYPE / SIZE: BTS LS BP
RELEASE: 23.09
PRINTED FOR
CONSTRUCTION

REVISION SCHEDULE

NO.	DATE	DESCRIPTION

CONSULTANT PROJECT #	24035.CC.S
DATE	03/27/2024
DRAWN BY	ES

Information contained on this drawing and in all digital files produced for above named project may not be reproduced in any manner without express written or verbal consent from authorized project representatives.

SHEET
ENLARGED SERVING AND BOH POWER PLAN

SHEET NUMBER
E-401

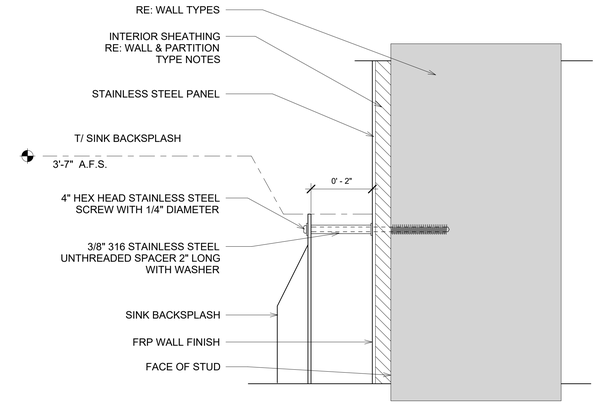

NOTE: TYPICAL DETAIL WHERE STAINLESS STEEL PANEL IS INSTALLED BEHIND KITCHEN SINK. RECOMMENDED SPACE BETWEEN ROD COUPLERS IS 20"-24".

1 STANDOFF DETAIL
NOT TO SCALE

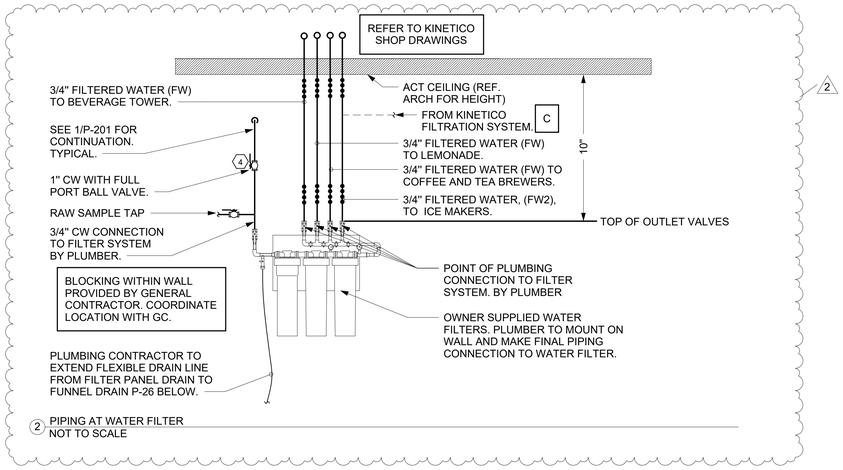

2 PIPING AT WATER FILTER
NOT TO SCALE

NOTE OF SPECIAL IMPORTANCE

1. LOCATIONS OF 2" CW RISER AND CLEAR SPACE ARE DIMENSIONED BECAUSE THEY ARE CRITICAL FOR THE FUTURE PUMP PANEL INSTALLATION.
2. GENERAL CONTRACTOR SHALL ENSURE OTHER TRADES SHALL NOT INSTALL ANY OTHER BUILDING COMPONENT WITHIN CLEAR SPACE OR WITHIN 10" OF EDGES.

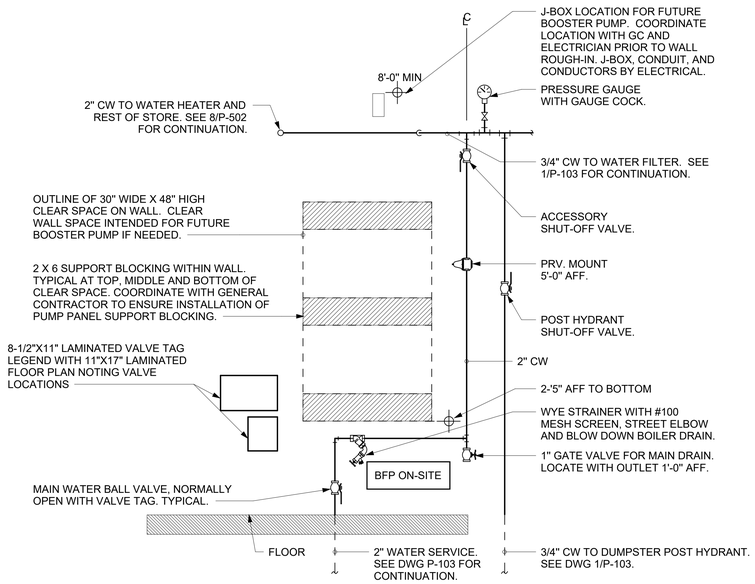

4 PIPING AT WATER SERVICE ENTRANCE IN MECHANICAL ROOM
NOT TO SCALE

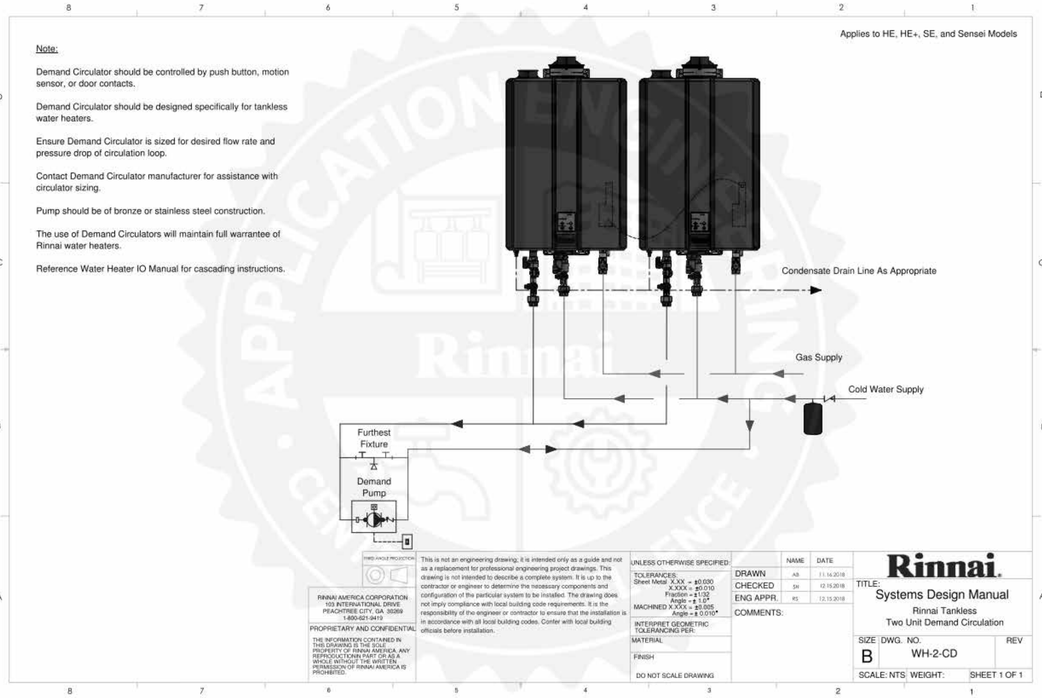

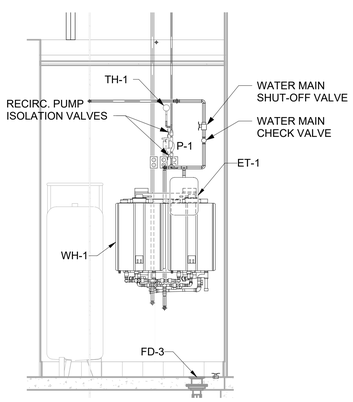

3 TANKLESS WATER HEATER DETAIL
NOT TO SCALE

Chick-fil-A
5200 Buffington Road
Atlanta, Georgia
30349-2998

Kurzynske & Associates
2705 Lebanon Pike - Suite One
Nashville, Tennessee 37214
Telephone: (615) 255-5203

ALABAMA REGISTERED PROFESSIONAL ENGINEER MARK T. KURZYNSKE
06/21/24

CHICK-FIL-A
VALLEY, AL
3215 20th Avenue
VALLEY, AL 36854

FSR#05772

BUILDING TYPE / SIZE: BTS LS BP
RELEASE: 23.09
PRINTED FOR
CONSTRUCTION

REVISION SCHEDULE

NO.	DATE	DESCRIPTION
2	06/21/2024	Construction Set

CONSULTANT PROJECT # 24035.CC.S
DATE 03/20/2024
DRAWN BY CH

Information contained on this drawing and in all digital files produced for above named project may not be reproduced in any manner without express written or verbal consent from authorized project representatives.

SHEET
PLUMBING DETAILS

SHEET NUMBER
P-502

6/21/2024 10:21:38 AM Autodesk Docs://AL_05772_Valley_2024_2_BTS/05772_Valley_PLB.rvt
40-LS-05772-P-502-PLUMBING DETAILS

Distribution Panel: MDP

LOCATION: | **SUPPLY FROM:** | **MOUNTING:** SURFACE | **ENCLOSURE:** NEMA 3R
VOLTS: 120/208 Wye | **PHASES:** 3 | **WIRES:** 4
A.I.C. SERIES RATING: 65K | **MAINS TYPE:** MCB | **MAINS RATING:** 1200 A | **MCB RATING:**

NT	CKT	LOAD DESCRIPTION	TRIP	POLE	A		B		C		POLE	TRIP	LOAD DESCRIPTION	CKT	NT
ST	1	PANEL-D1	250 A	3	25.92	24.02					3	250 A	PANEL-D2	2	ST
--	3	--	--	--			26.90	24.02			--	--	--	4	--
--	5	--	--	--					25.68	24.02	--	--	--	6	--
	7	ROOFTOP UNIT (25 TN) AC#1	150 A	3	16.44	24.02					3	250 A	PANEL-D3	8	ST
--	9	--	--	--			16.44	24.02			--	--	--	10	--
--	11	--	--	--					16.44	24.02	--	--	--	12	--
	13	ROOFTOP UNIT (5 TN) AC#2	40 A	3	3.36	11.64					3	110 A	ROOFTOP UNIT (17.5 TN) AC#3	14	
--	15	--	--	--			3.36	11.64			--	--	--	16	--
--	17	--	--	--					3.36	11.64	--	--	--	18	--
	19	PANEL-A (SUB-FEEDS PANEL-POS)	250 A	3	29.85	24.89					3	250 A	PANEL B	20	
--	21	--	--	--			28.45	25.36			--	--	--	22	--
--	23	--	--	--					30.18	24.69	--	--	--	24	--
	25	TVSS	30 A	3	0.00	25.48					3	250 A	PANEL-C	26	
--	27	--	--	--			0.00	25.19			--	--	--	28	--
--	29	--	--	--					0.00	25.61	--	--	--	30	--
			Total Load:		185.6 kVA		185.4 kVA		185.6 kVA						
			Total Amps:		1547.2 A		1544.8 A		1547.3 A						

Load Classification	Connected Load	Demand Factor	Estimated Demand	Panel Totals	
HVAC	112994 VA	100.00%	112994 VA		
KITCHEN EQUIPMENT	28363 VA	65.00%	18436 VA	**Total Conn. Load:**	556.3 kVA
KITCHEN REFRIG EQUIPMENT	59708 VA	65.00%	38810 VA	**Total Est. Demand:**	498.4 kVA
LIGHTING	8874 VA	125.00%	11092 VA	**Total Conn.:**	1544.1 A
LIGHTING - EXTERIOR	5139 VA	125.00%	6424 VA	**Total Est. Demand:**	1383.3 A
MISCELLANEOUS	4149 VA	100.00%	4149 VA		
Motor	29402 VA	109.62%	32230 VA		
RECEPTACLES	12551 VA	89.84%	11276 VA		
COOKING (100% DEMAND)	203273 VA	100.00%	203273 VA		
COOKING	91839 VA	65.00%	59695 VA		

LOAD SUMMARY

TOTAL CONNECTED KVA	IF TOTAL LOAD IS 0_200 KVA	IF TOTAL LOAD IS 201_325 KVA	IF TOTAL LOAD IS 326-800 KVA	IF TOTAL LOAD IS OVER 800 KVA	DIVERSIFIED AMPS AT 208 VOLT
556.28 kVA	0	0	366.58	0	1018.27

CALCULATION PER NEC 220.88
(NOT ALL ELECTRIC RESTAURANT LOAD)

Branch Panel: POS

LOCATION: OFFICE 40 | **SUPPLY FROM:** A | **MOUNTING:** FLUSH | **ENCLOSURE:** NEMA 1
VOLTS: 120/120 Single | **PHASES:** 1 | **WIRES:** 2
2+G+IG
PROVIDE A JUMPER FOR PHASE A & B
A.I.C. SERIES RATING: 10K | **MAINS TYPE:** MLO | **MAINS RATING:** 100 A | **MCB RATING:**

NT	CKT	LOAD DESCRIPTION	TRIP	POLE	B		POLE	TRIP	LOAD DESCRIPTION	CKT	NT
I,IG	1	COUNTER STATIONS (180,182)	15 A	1	0.723	0.180	1	15 A	CCTV RACK TECH CLOSET	2	IG
	3	SPACE	--	1	--	--	1	--	SPACE	4	
	5	SPACE	--	1	--	0.070	1	15 A	OFFICE RECEPTACLE (COMP)	6	IG
	7	SPACE	--	1	--	--	1	--	SPACE	8	
I,IG	9	DT POS STATION (180,182)	15 A	1	0.125	0.172	1	15 A	PASS THRU MONITORS (183,182L)	10	I,IG
	11	SPACE	--	1	--	--	1	--	SPACE	12	
I,IG	13	MLOP POS STATIONS (180,182L)	15 A	1	0.168	0.180	1	15 A	NETWORK RACK TECH CLOSET	14	IG
	15	SPACE	--	1	--	--	1	--	SPACE	16	
I,IG	17	MLOP MONITORS (183)	15 A	1	0.112	0.050	1	15 A	ISP MODEM	18	IG
	19	SPACE	--	1	--	--	1	--	SPACE	20	
	21	PASS THRU MONITORS (183,182L)	15 A	1	0.249	--	1	--	SPACE	22	
	23	SPACE	--	1	--	0.000	1	20 A	BACKFED MAIN BREAKER	24	
				Total Load:	2.03 kVA						
				Total Amps:	16.9 A						

Load Classification	Connected Load	Demand Factor	Estimated Demand	Panel Totals	
MISCELLANEOUS	1668 VA	100.00%	1668 VA		
RECEPTACLES	360 VA	100.00%	360 VA	**Total Conn. Load:**	2.0 kVA
				Total Est. Demand:	2.0 kVA
				Total Conn.:	16.9 A
				Total Est. Demand:	16.9 A

GFCI REQUIREMENTS PER 2020 NEC:

THE CONTRACTOR SHALL PROVIDE GROUND FAULT PROTECTION FOR ALL RECEPTACLE OUTLET BRANCH CIRCUITS IN THE KITCHEN / FOOD PREPARATION AREAS IN ACCORDANCE WITH THE 2020 EDITION OF THE NEC.

PANELBOARD NOTES

- (A) CONTROLLED BY RELAY IN CONTROL PANEL CFA-T500 AND STORE-OPEN EXHAUST FAN SWITCH. PANELBOARD SUPPLIER TO PROVIDE NOTATION ON CIRCUIT THAT THE CFA-T500 ALSO HAS AN INTEGRAL BREAKER ON THE FAN CIRCUITS FOR THE DISCONNECTION OF POWER AT THE CONTROLLER PER THE NEC. SEE CFA-T500 CONTROL PANEL CONNECTION DIAGRAM ON E-001P.
- (B) CONTROLLED BY EXTERIOR SIGN RELAY IN CONTROL PANEL CFA-T500.
- (C) CONTROLLED BY EXTERIOR LIGHTING RELAY IN CONTROL PANEL CFA-T500.
- (D) CONTROLLED BY EXTERIOR LIGHTING RELAY - DUSK TO DAWN ZONE.
- (E) CONTROLLED BY PARKING LOT LIGHTING CONTROL SWITCH.
- (F) GFCI TYPE BREAKER TO BE 30MA TYPE BREAKER.
- (H) THE CONTRACTOR SHALL PROVIDE GROUND FAULT TYPE RECEPTACLES FOR ALL 120 VOLT, 15 AND 20 AMP, RECEPTACLES IN THE KITCHEN/FOOD PREPARATION AREA UNLESS NOTED OTHERWISE. (NOTE THAT THE RECEPTACLES FOR THE OEP BOXES, THE KITCHEN/SERVING AREA, SERVING EQUIPMENT, AND THE CIRCUIT FOR THE FLY SYSTEM SHALL BE PROTECTED BY GROUND FAULT TYPE CIRCUIT BREAKERS RATHER THAN GROUND FAULT TYPE RECEPTACLES SINCE ISOLATED GROUNDING TYPE RECEPTACLES, AND CLOCK TYPE RECEPTACLES ARE NOT AVAILABLE AS GROUND FAULT TYPE.) GFCI BREAKERS REQUIRE A DEDICATED NEUTRAL (NOT SHARED) TO OPERATE PROPERLY.
- (I) GFCI TYPE BREAKER TO BE 5MA TYPE BREAKER.
- (IG) ISOLATED GROUND.
- (J) CONTROLLED BY INTERIOR LIGHTING RELAYS IN CONTROL PANEL T-500. LIGHTS SHALL TURN ON WHEN STORE IS OCCUPIED.
- (L) LOCK-ON.
- (LO) LOCK-OFF FOR MAINTENANCE.
- (M) HIGH MAG LOAD.
- (SB) THRU (1) SB6100-020-0 GFCI PROTECTION DEVICE IN SB6000 PANEL ENCLOSURE OR (1) SB6100-021-0 GFCI PROTECTION DEVICE SURFACE MOUNTED ENCLOSURE FOR 80 AMP FRYERS; OR (1) SB5060-021-0 GFCI PROTECTION DEVICE SURFACE MOUNTED ENCLOSURE FOR 60 AMP DISHWASHER.
- (ST) SHUNT TRIP. INTERLOCK W/ FIRE SUPPRESSION SYSTEM VIA T-500 PANEL. REFER TO WIRING INSTRUCTIONS INCLUDED WITH SHUNT TRIP BREAKER.
- (S) SURGE PROTECTION FOR INDIVIDUAL CIRCUIT. MOUNT SINGLE CIRCUIT SURGE PROTECTION DEVICE (SQUARE D) SDSA1175T TO FACEPLATE MOUNTED ON JUNCTION BOX DIRECTLY ABOVE PANELBOARD SERVING LOAD.

Branch Panel: A

LOCATION: | **SUPPLY FROM:** MDP | **MOUNTING:** FLUSH | **ENCLOSURE:** NEMA 1
VOLTS: 120/208 Wye | **PHASES:** 3 | **WIRES:** 4
A.I.C. SERIES RATING: 65K/10K | **MAINS TYPE:** MLO | **MAINS RATING:** 250 A

NT	CKT	LOAD DESCRIPTION	TRIP	POLE	A		B		C		POLE	TRIP	LOAD DESCRIPTION	CKT	NT
H	1	DRIVE-THRU VIDEO MONITOR (190)	20 A	1	0.456	0.180					1	20 A	GENERAL OUTLETS	2	H
	3	OFFICE GEN OUTLETS (CO2,669)	20 A	1			0.720	0.195			1	20 A	GENERAL OUTLETS	4	H
	5	OFF GEN OUTLETS, PRINTER, MUSIC	20 A	1					0.575	1.656	1	20 A	TEA BREWER (305)	6	H
H	7	SINGLE U.C. REF (420LA)	20 A	1	0.564	1.656					1	20 A	TEA BREWER (305)	8	H
H	9	SINGLE U.C. REF (420L)	20 A	1			0.564	2.208			1	20 A	PANEL-POS THRU PIB	10	M
H	11	SINGLE U.C. REF (420)	20 A	1					0.564	0.100	1	20 A	TECH CLOSET FAN TF#1	12	
	13	SPARE	20 A	1	0.000	0.180					1	20 A	DARPRO OIL TANK	14	
H	15	SINGLE U.C. REF (420L)	20 A	1			0.564	0.480			1	20 A	SECURITY SYSTEM	16	L
I	17	DOUBLE U.C. REF (421)	20 A	1					0.756	0.749	3	15 A	COOLER CONDENSER/EVAP COIL (449)	18	LO
I	19	SINGLE SANDWICH SLIDE (563SL)	20 A	1	0.547	0.749					--	--	--	20	--
I	21	DOUBLE SANDWICH SLIDE (563D)	20 A	1			1.096	0.690			--	--	--	22	--
--	23	CARBONATOR (320)	20 A	1					0.744	0.095	1	20 A	TECH CLOS. FAN TF#1	24	
--	25	CARBONATOR (320)	20 A	1	0.744	1.752					3	35 A	FREEZER CONDENSER/EVAP COIL (410)	26	LO
--	27	CARBONATOR (320)	20 A	1			0.744	1.908			--	--	--	28	--
--	29	CARBONATOR (320)	20 A	1					0.744	1.908	--	--	--	30	--
--	31	CARBONATOR (F320)	20 A	1	0.744	0.000					1	20 A	SPARE	32	
	33	GEN OUTLET TECH CLOSET	20 A	1			0.180	0.546			1	20 A	FREEZER HEAT TAPE/PR VALVES (410)	34	F
	35	FUTURE/RACK AC TECH CLOSET	20 A	1					1.272	1.144	2	20 A	BOOSTER PUMP	36	--
	37	FUTURE/RACK AC TECH CLOSET	20 A	1	1.272	1.144					--	--	--	38	--
	39	GEN OUTLET TECH CLOSET	20 A	1			0.180	0.360			1	20 A	CCTV TECH CLOSET	40	
I	41	CIR A1-HOT HOLDING CABINET (562A)	20 A	1					1.920	1.920	1	20 A	CIR A2-HOT HOLDING CABINET (562A)	42	I
I	43	CIR B1-VERTICAL TOASTER (500A)	20 A	1	1.800	0.660					1	20 A	CIR B2-HOT HOLDING CABINET (564B)	44	I
I	45	CIR C1-GENERAL OUTLET (122)	20 A	1			0.180	1.920			1	20 A	CIR D2-HOT HOLDING CABINET (580H)	46	I
I	47	CIR D1-HOT HOLDING CABINET (580H)	20 A	1					1.920	0.180	1	20 A	CIR C2-GEN OUTLET (122)	48	I
I	49	CIR E1-U.C. REFRIG (420L)	20 A	1	0.564	0.564					1	20 A	CIR E2-U.C. REFRIG (420L)	50	I
I	51	CIR F1-GEN OUTLET (122)	20 A	1			0.180	0.660			1	20 A	CIR F2-HOT HOLDING CABINET (564B)	52	I
I	53	CIR G1-VERTICAL TOASTER (500A)	20 A	1					1.800	0.852	1	20 A	CIR G2-COLD RAIL 439L	54	I
I	55	CIR H1-RADIANT TOASTER (500B)	30 A	2	2.496	2.496					2	30 A	CIR H2-SPARE/FUTURE (500B)	56	I
--	57	--	--	--			2.496	2.496			--	--	--	58	--
	59	SPARE	20 A	1					0.000	2.642	3	30 A	RETHERMALIZER (592)	60	I
LO,I	61	ICE CREAM MACHINE (300X-A)	30 A	3	2.282	2.642					--	--	--	62	--
--	63	--	--	--			2.282	2.642			--	--	--	64	--
--	65	--	--	--					2.282	0.600	1	20 A	TRASH COMPACTOR (TC)	66	--
LO,I	67	ICE CREAM MACHINE (300X-B)	20 A	3	1.801	0.600					1	20 A	TRASH COMPACTOR (TC)	68	--
--	69	--	--	--			1.801	0.000			1	20 A	SPARE	70	
--	71	--	--	--					1.801	0.600	1	20 A	TRASH COMPACTOR (TC)	72	--
	73	ROOFTOP UNIT (5 TN) AC#4	40 A	3	3.360	0.600					2	20 A	TRASH COMPACTOR (TC)	74	--
--	75	--	--	--			3.360	0.000			1	20 A	SPARE	76	
--	77	--	--	--					3.360	0.000	1	20 A	SPARE	78	
	79	SPARE	20 A	1	0.000	--					1	--	SPACE	80	
	81	SPARE	20 A	1			0.000	--			1	--	SPACE	82	
	83	SPARE	20 A	1					0.000	--	1	--	SPACE	84	
			Total Load:		29.85 kVA		28.45 kVA		30.18 kVA						
			Total Amps:		250.6 A		237.1 A		253.3 A						

Load Classification	Connected Load	Demand Factor	Estimated Demand	Panel Totals	
HVAC	12674 VA	100.00%	12674 VA		
KITCHEN EQUIPMENT	4440 VA	65.00%	2886 VA	**Total Conn. Load:**	88.5 kVA
KITCHEN REFRIG EQUIPMENT	24997 VA	65.00%	16248 VA	**Total Est. Demand:**	66.3 kVA
MISCELLANEOUS	2229 VA	100.00%	2229 VA	**Total Conn.:**	245.6 A
Motor	4833 VA	111.84%	5405 VA	**Total Est. Demand:**	184.2 A
RECEPTACLES	3851 VA	100.00%	3851 VA		
COOKING	35465 VA	65.00%	23052 VA		

Branch Panel: B

LOCATION: | **SUPPLY FROM:** MDP | **MOUNTING:** FLUSH | **ENCLOSURE:** NEMA 1
VOLTS: 120/208 Wye | **PHASES:** 3 | **WIRES:** 4
A.I.C. SERIES RATING: 65K/10K | **MAINS TYPE:** MLO | **MAINS RATING:** 250 A

NT	CKT	LOAD DESCRIPTION	TRIP	POLE	A		B		C		POLE	TRIP	LOAD DESCRIPTION	CKT	NT
H	1	GENERAL OUTLET	20 A	1	0.720									2	
H	3	HME	20 A	1			0.180	0.900			1	20 A	TEAM MEMBER OUTLETS	4	
H	5	BEVERAGE DISPENSER (315W)	20 A	1					1.200	0.180	1	20 A	MANAGER'S STATION	6	H
H	7	MILKSHAKE BASE DISPENSER (300a)	20 A	1	0.480	0.000					1	20 A	SPARE	8	
--	9	ROOF MTD ICE MAKER (380C)	25 A	3			1.705	1.500			1	20 A	FOOD COOKER/WARMER (565C)	10	--
--	11	--	--	--					1.705	1.848	1	20 A	FRY HOLDING STATION (560)	12	H
--	13	--	--	--	1.705	1.848					1	20 A	FRY HOLDING STATION (560)	14	H
H	15	LEMON JUICER STAND (607)	20 A	1			0.192	0.600			1	20 A	DRIVE-THRU DOOR	16	I
H	17	DOUBLE LEMONADE BUBBLER (310)	20 A	1					1.020	1.705	3	25 A	ROOF MTD ICE MAKER (380C)	18	--
H	19	DOUBLE LEMONADE BUBBLER (310)	20 A	1	1.020	1.705					--	--	--	20	--
H	21	DOUBLE LEMONADE BUBBLER (310)	20 A	1			1.020	1.705			--	--	--	22	--
	23	ROOF RECEPTACLES	20 A	1					1.080	0.600	1	15 A	ICE MACHINE (380D)	24	--
	25	DINING AREA OUTLETS	20 A	1	1.620	0.610					1	15 A	ICE MACHINE (380/380a)	26	--
	27	DINING AREA OUTLETS	20 A	1			0.540	0.180			1	20 A	GENERAL OUTLET	28	H
	29	DINING AREA OUTLETS	20 A	1					1.080	0.000	1	20 A	FACP (WHEN REQUIRED)	30	L
	31	SPARE	20 A	1	0.000	0.000					1	20 A	SPARE	32	
I	33	FLY LIGHTS (211B,211C)	20 A	1			0.158	0.237			1	20 A	REFUSE ENCLOSURE	34	
H	35	BEVERAGE DISPENSER (315W)	20 A	1					1.200	0.360	1	20 A	T500/SHUNT TRIP (269,270)	36	
H	37	BEVERAGE DISPENSER (315W)	20 A	1	1.200	0.360					1	20 A	GEN OUTLETS/DOORBELL	38	--
H	39	BEVERAGE DISPENSER (315W)	20 A	1			1.200	0.610			1	15 A	ICE MACHINE/SANI SYSTEM (380D/380a)	40	H
H	41	SPARE BEVERAGE DISPENSER (S315W)	20 A	1					1.200	0.000	1	20 A	SPARE	42	
I	43	SINGLE COFFEE MAKER (308)	30 A	2	1.997	2.185					1	20 A	OPTIONAL AIR COMPRESSOR	44	--
--	45	--	--	--			1.997	0.000			1	20 A	(1 OF 2 LOCATIONS)	46	
I	47	DROP CORD OUTLET (GEN)	20 A	1					0.180	0.384	1	20 A	OPTIONAL SALAD SPINNER	48	I
I	49	DROP CORD OUTLET (GEN)	20 A	1	0.180	0.180					1	20 A	DROP CORD OUTLET (GEN)	50	I
I	51	DROP CORD OUTLET (GEN)	20 A	1			0.180	0.374			2	20 A	UNHEATED AIR DOOR AD#2	52	LO
I	53	DROP CORD OUTLET (GEN)	20 A	1					0.180	0.374	--	--	--	54	--
I	55	DROP CORD OUTLET (GEN)	20 A	1	0.180	1.128					1	20 A	SINGLE UPRIGHT FREEZER (400L)	56	--
I	57	DROP CORD OUTLET (GEN)	20 A	1			0.180	1.128			1	20 A	SINGLE UPRIGHT FREEZER (400L)	58	--
	59	SPARE	20 A	1					0.000	0.000	1	20 A	SPARE	60	
	61	SPARE	20 A	1	0.000	1.920					1	20 A	DOUBLE THAWING (444D)	62	I
	63	HEATER (EIH#1)	40 A	2			3.000	1.920			1	20 A	DROP CORD OUTLET (F444D)	64	I
--	65	--	--	--					3.000	1.920	1	20 A	SINGLE THAWING (444S)	66	I
--	67	ROOF MTD ICE MAKER (380C)	25 A	3	1.705	0.000					1	20 A	SPARE	68	
--	69	--	--	--			1.705	0.000			1	20 A	SPARE	70	
--	71	--	--	--					1.705	0.000	1	20 A	SPARE	72	
LO	73	HEATED AIR DOOR AD#1	40 A	3	3.771	0.374					2	20 A	UNHEATED AIR DOOR AD#3	74	LO
--	75	--	--	--			3.771	0.374			--	--	--	76	--
--	77	--	--	--					3.771	0.000	1	20 A	SPARE	78	
	79	SPARE	20 A	1	0.000	0.000					1	20 A	SPARE	80	
	81	SPARE	20 A	1			0.000	0.000			1	20 A	SPARE	82	
	83	SPARE	20 A	1					0.000	0.000	1	20 A	SPARE	84	
			Total Load:		24.89 kVA		25.36 kVA		24.69 kVA						
			Total Amps:		207.7 A		211.6 A		205.8 A						

Load Classification	Connected Load	Demand Factor	Estimated Demand	Panel Totals	
HVAC	6000 VA	100.00%	6000 VA		
KITCHEN EQUIPMENT	1644 VA	65.00%	1069 VA	**Total Conn. Load:**	74.6 kVA
KITCHEN REFRIG EQUIPMENT	29155 VA	65.00%	18950 VA	**Total Est. Demand:**	61.4 kVA
LIGHTING	215 VA	125.00%	269 VA	**Total Conn.:**	207.0 A
Motor	15775 VA	117.93%	18603 VA	**Total Est. Demand:**	170.6 A
RECEPTACLES	6840 VA	100.00%	6840 VA		
COOKING	14950 VA	65.00%	9718 VA		

Branch Panel: C

LOCATION: | **SUPPLY FROM:** MDP | **MOUNTING:** FLUSH | **ENCLOSURE:** NEMA 1
VOLTS: 120/208 Wye | **PHASES:** 3 | **WIRES:** 4
A.I.C. SERIES RATING: 65K/10K | **MAINS TYPE:** MLO | **MAINS RATING:** 250 A

NT	CKT	LOAD DESCRIPTION	TRIP	POLE	A		B		C		POLE	TRIP	LOAD DESCRIPTION	CKT	NT
J	1	KITCHEN LTG	20 A	1	0.272	0.000					1	20 A	SPARE	2	
J	3	KITCHEN LTG EF#4	20 A	1			1.295	0.120			1	20 A	ITIMER (184T)	4	I
J	5	RESTROOM LTG & EF#3	20 A	1					1.397	0.120	1	20 A	ICE BATH BREADING (440CT)	6	I
J	7	DINING AREA LTG	20 A	1	0.154	0.180					1	20 A	DROP CORD OUTLET (GEN)	8	I
J	9	SERVING/PLAY AREA LTG	20 A	1			0.307	0.120			1	20 A	IPAD (184)	10	--
J	11	DINING AREA LTG	20 A	1					0.899	0.120	1	20 A	ICE BATH BREADING (440CT)	12	I
J	13	RECIRC PUMP/FILTER	20 A	1	0.840	0.180					1	20 A	DROP CORD OUTLET (GEN)	14	I
	15	WATER HEATER	20 A	1			0.960	0.960			1	20 A	WATER HEATER	16	
H	17	DIGITAL MENU BOARD (672)	20 A	1					0.585	0.756	1	20 A	DBL REF WORK TABLE (432T)	18	--
B	19	DIRECTIONAL SIGNS	20 A	1	0.500	0.180					1	20 A	DROP CORD OUTLET (GEN)	20	I
E	21	SITE LIGHTING	20 A	2			0.306	0.212			1	20 A	DROP CORD OUTLET (GEN)	22	I
--	23	--	--	--					0.306	1.080	1	20 A	SALAD PREP TABLE (441)	24	I
E	25	SITE LIGHTING	20 A	2	0.230	0.000					1	20 A	SPARE	26	
--	27	--	--	--			0.230	0.840			1	20 A	SINGLE UPRIGHT REF (442WCLT)	28	I
D	29	SECURITY/FLAGPOLE LTG	20 A	1					0.465	0.120	1	20 A	ICE BATH BREADING (F440CT)	30	I
C	31	BLDG EXTERIOR LTG	20 A	1	0.544	0.212					1	20 A	DROP CORD OUTLET (GEN)	32	I
S,J	33	MLOP &OMD CANOPY LTG	20 A	1			0.360	0.180			1	20 A	DROP CORD OUTLET (GEN)	34	I
LO	35	FRZR/COOLER LTG (410/449)	20 A	1					0.580	0.180	1	20 A	DROP CORD OUTLET (GEN)	36	I
B	37	MAIN ID SIGN	20 A	1	0.980	1.920					1	20 A	DOUBLE THAWING (444D)	38	I
B	39	MAIN ID SIGN	20 A	1			0.800	0.212			1	20 A	DROP CORD OUTLET (GEN)	40	I
B	41	MAIN ID SIGN	20 A	1					0.800	0.960	1	20 A	FLOOR MIXER (600T)	42	I
B	43	BUILDING SIGNAGE	20 A	1	1.440	0.804					1	20 A	REF EQUIP STAND (422T)	44	I
B	45	BUILDING SIGNAGE	20 A	1			0.720	0.212			1	20 A	DROP CORD OUTLET (GEN)	46	I
B	47	BUILDING SIGNAGE	20 A	1					1.440	1.656	1	25 A	HOOD EXHAUST FAN (EF#1)	48	A
	49	SPARE	20 A	1	0.000	1.656					1	25 A	HOOD EXHAUST FAN (EF#2)	50	A
S	51	DRIVE THRU ORDERING	20 A	1			1.500	1.584			1	20 A	CANOPY FANS CF#1	52	I,J,S
I,J,S	53	MLOP CANOPY FANS	20 A	1					1.056	0.862	1	20 A	HOOD CJ FANS	54	A
I	55	EGG STATION (503T)	20 A	2	1.300	1.300					2	20 A	EGG STATION (503T)	56	I
--	57	--	--	--			1.300	1.300			--	--	--	58	--
I	59	DROP CORD OUTLET (GEN)	20 A	1					0.180	1.300	2	20 A	FUTURE EGG STATION (F503T)	60	I
H	61	DBL REF WORK TABLE (431T)	20 A	1	0.756	1.300					--	--	--	62	--
I	63	DROP CORD OUTLET (GEN)	20 A	1			0.180	0.960			1	20 A	SINGLE UPRIGHT REF(443GLT)	64	H
I	65	FUTURE VECTOR OVEN (F505VLT)	30 A	3					2.642	2.642	3	30 A	VECTOR OVEN (505VLT)	66	I
--	67	--	--	--	2.642	2.642					--	--	--	68	--
--	69	--	--	--			2.642	2.642			--	--	--	70	--
I	71	VECTOR OVEN (505VLT)	30 A	3					2.642	2.642	3	30 A	VECTOR OVEN (505VLT)	72	I
--	73	--	--	--	2.642	2.642					--	--	--	74	--
--	75	--	--	--			2.642	2.642			--	--	--	76	--
	77	OMD CANOPY OUTLET	20 A	1					0.180	0.000	1	20 A	SPARE	78	
	79	OMD CANOPY OUTLET	20 A	1	0.180	--					1	--	SPACE	80	
	81	SPARE	20 A	1			0.000	--			1	--	SPACE	82	
	83	SPARE	20 A	1					0.000	--	1	--	SPACE	84	
			Total Load:		25.48 kVA		25.19 kVA		25.61 kVA						
			Total Amps:		212.8 A		209.9 A		213.8 A						

Load Classification	Connected Load	Demand Factor	Estimated Demand	Panel Totals	
KITCHEN EQUIPMENT	2940 VA	65.00%	1911 VA		
KITCHEN REFRIG EQUIPMENT	5556 VA	65.00%	3611 VA	**Total Conn. Load:**	76.3 kVA
LIGHTING	8659 VA	125.00%	10824 VA	**Total Est. Demand:**	62.7 kVA
LIGHTING - EXTERIOR	5139 VA	125.00%	6424 VA	**Total Conn.:**	211.7 A
MISCELLANEOUS	1920 VA	100.00%	1920 VA	**Total Est. Demand:**	174.0 A
Motor	8794 VA	104.71%	9208 VA		
RECEPTACLES	1860 VA	100.00%	1860 VA		
COOKING	41424 VA

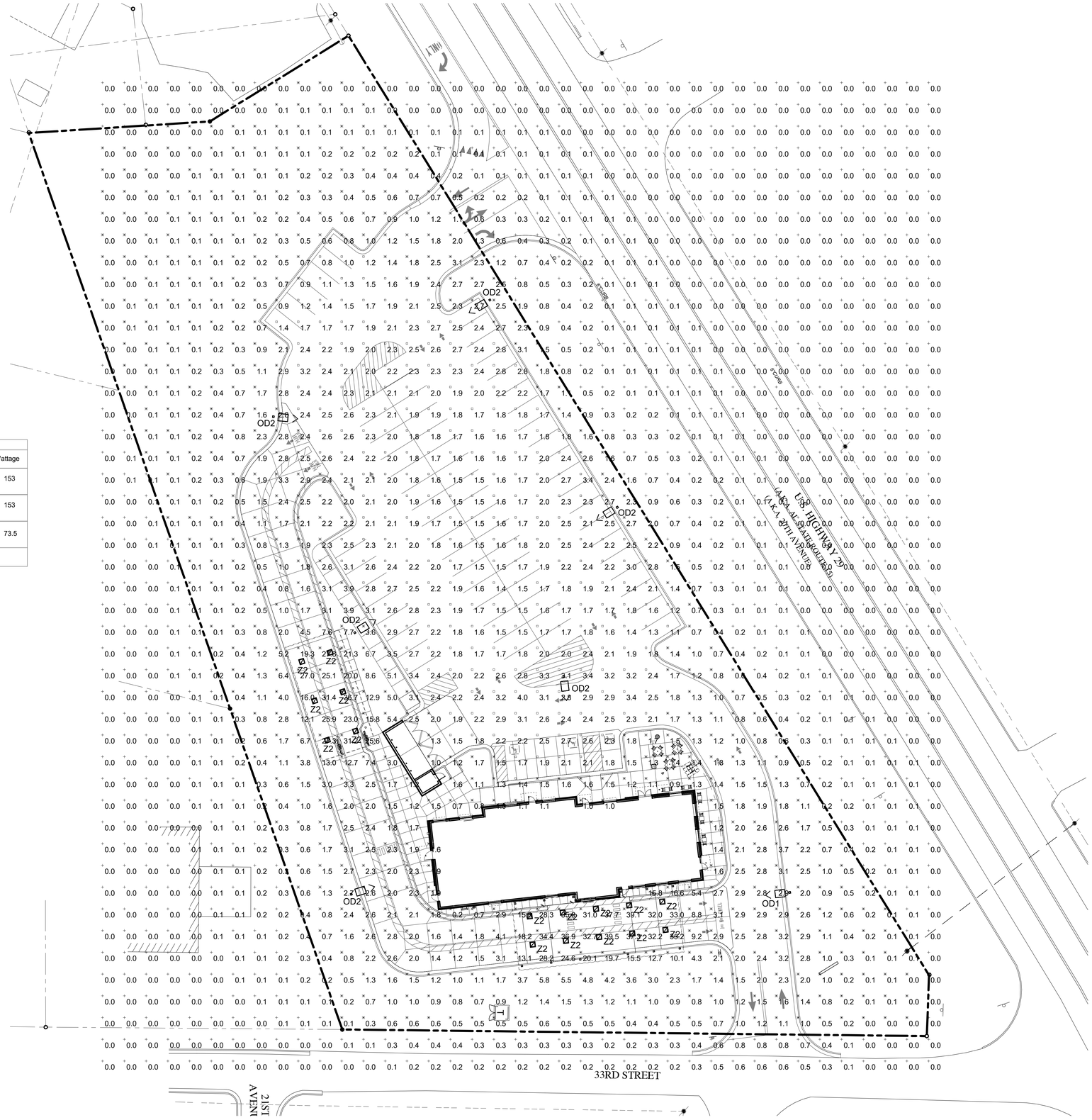

Schedule								
Symbol	Label	Quantity	Manufacturer	Catalog Number	Number Lamps	Lumens Per Lamp	Light Loss Factor	Wattage
	OD1	1	EATON - LUMARK (FORMER COOPER LIGHTING)	PRV-C60-D-UNV-T3-BZ	2	10029	0.95	153
	OD2	6	EATON - LUMARK (FORMER COOPER LIGHTING)	PRV-C60-D-UNV-T4-BZ	2	9993	0.95	153
	Z2	16	LSI INDUSTRIES, INC	CRUS-SC-LED-LW-30	1	9966	0.95	73.5

OD POLES SHALL BE 25' SQUARE STRAIGHT STEEL POLES BY KW INDUSTRIES: SSP25-4.0-7-BRZ-DM10-BC.
MOUNT POLES ON A 2' CONCRETE POLE BASE. POLES AND LIGHTING FIXTURES TO HAVE A DARK BRONZE FINISH.

Statistics						
Description	Symbol	Avg	Max	Min	Max/Min	Avg/Min
Calc Zone	+	1.2 fc	39.5 fc	0.0 fc	N/A	N/A
CFA Lot Summary	×	2.6 fc	39.5 fc	0.0 fc	N/A	N/A
Parking Lot Summary	□	2.1 fc	4.0 fc	0.8 fc	5.0:1	2.6:1

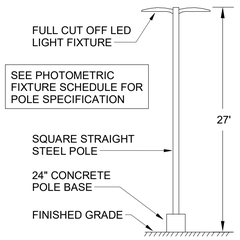

B4 AREA LIGHTING POLE DETAIL
N.T.S.

A1 PHOTOMETRIC PLAN
1" = 20'-0"

20' 10' 0' 20' 40'

Chick-fil-A
5200 Buffington Road
Atlanta, Georgia
30349-2998

Kurzynske & Associates
2705 Lebanon Pike - Suite One
Nashville, Tennessee 37214
Telephone: (615) 255-5203

ALABAMA REGISTERED PROFESSIONAL ENGINEER MARK T. KURZYNSKE
06/21/24

CHICK-FIL-A
VALLEY, AL

3215 20TH AVENUE
VALLEY, AL 36854

FSR#05772

BUILDING TYPE / SIZE: BTS LS
RELEASE:
PRINTED FOR
CONSTRUCTION

REVISION SCHEDULE

NO.	DATE	DESCRIPTION

CONSULTANT PROJECT #	24035.CC.S
DATE	03/27/2024
DRAWN BY	ES

Information contained on this drawing and in all digital files produced for above named project may not be reproduced in any manner without express written or verbal consent from authorized project representatives.

SHEET
SITE PHOTOMETRIC PLAN

SHEET NUMBER
E-102

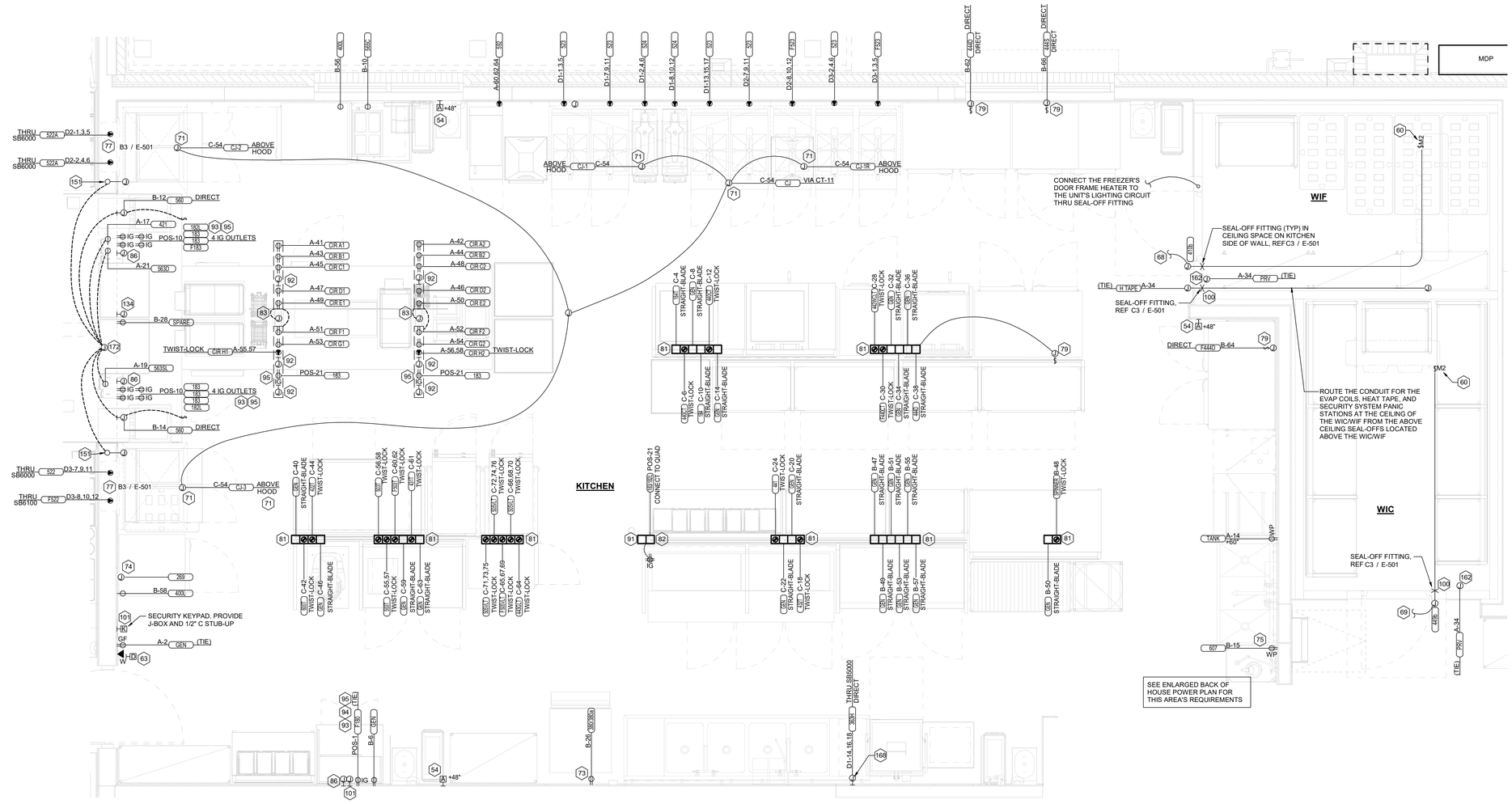

B1 ENLARGED KITCHEN POWER PLAN
1/2" = 1'-0"

ELECTRICAL KEYNOTES

54 PROVIDE TWO-GANG DEEP BOX (2" MIN.) FOR FS PULL STATION. EXTEND 1/2" CONDUIT FROM BOX, STUBBED ABOVE CEILING.

60 PROVIDE DISCONNECT SWITCH IN NEMA 3R ENCLOSURE AT THE UNIT'S EVAPORATOR COIL.

63 PROVIDE 2 GANG DEEP BOX (2" MIN.) FOR EACH DUCT SMOKE DETECTOR INDICATED ON THE MECHANICAL DRAWINGS FOR INSTALLATION OF DUCT DETECTOR REMOTE ANNUNCIATORS BY MECHANICAL. THE DUCT SMOKE REMOTE ANNUNCIATORS ARE PROVIDED TO THE ELECTRICIAN WITH THE SUNCOAST ELECTRONICS PACKAGE OF GEAR AND CONTROLS. EXTEND 1/2" CONDUIT FROM EACH BOX AND STUB ABOVE CEILING.

68 CONNECT EVAPORATOR UNIT IN FREEZER TO FREEZER CONDENSING UNIT CONTROLS LOCATED ON ROOF. SEE THE ELECTRICAL ROOF PLAN.

69 CONNECT EVAPORATOR UNIT IN COOLER TO COOLER CONDENSING UNIT CONTROLS LOCATED ON ROOF. SEE THE ELECTRICAL ROOF PLAN.

71 CONNECT AS REQUIRED TO CJ FAN VIA THE HOOD SUPPLIED SPEED CONTROLLER. CONNECT HOMERUN VIA A RELAY IN THE CFA-T500 CONTROL SECTION.

73 SEE THE ELECTRICAL ROOF PLAN FOR THE LOCATION OF THE ICE MAKER CONDENSERS AND ANY ADDITIONAL REQUIREMENTS.

74 PROVIDE 3#12 IN 1/2" CONDUIT BETWEEN THE CFA-T500 CONTROL PANEL AND THE FIRE SUPPRESSION SYSTEM PANEL(S). SEE FIRE SUPPRESSION SYSTEM WIRING DIAGRAM DETAIL ON SHEET E-702 FOR ADDITIONAL INFORMATION.

75 PROVIDE GROUND FAULT CIRCUIT INTERRUPTER (GFCI) TYPE RECEPTACLE IN COMPLIANCE WITH THE NEC REQUIREMENT FOR KITCHEN/FOOD PREP AREAS. IF THE RECEPTACLE OUTLET IS NOT NOTED AS GFCI, THEN THE BREAKER IS TO BE GFCI TYPE.

77 THE RECESSED PIN AND SLEEVE BOX WITH THE 'SLEEVE' RECEPTACLE FOR THE OPEN FRYERS (ITEMS #522 AND 522A) ARE FURNISHED BY THE EXHAUST HOOD SUPPLIER AND INSTALLED BY THE CONTRACTOR. THE OPEN FRYER SUPPLIER PROVIDES PREWIRED CORDSET WITH A PIN DEVICE INTERGRAL WITH THE OPEN FRYER TO PLUG INTO THE SLEEVE RECEPTACLE.

79 SINGLE POLE SWITCH SHALL SERVE AS THE LOCAL "IN-SIGHT" MEANS OF DISCONNECT FOR EQUIPMENT ITEM AS NOTED. SEE DIRECT CONNECTION DETAILS ON SHEET E-501 FOR FURTHER INFORMATION.

81 OVERHEAD EQUIPMENT POWER (OEP) DROP CORD RECEPTACLES FROM A FLUSH MOUNTED CEILING OEP BOX (MAXIMUM OF SIX PER ASSEMBLY.) PROVIDE A-C-S OEP ASSEMBLY #12360-1000. ASSEMBLY WILL CONSIST OF A FLUSH CEILING OUTLET BOX, TWIST-LOCK PENDANT RECEPTACLES, STRAIGHT BLADE PENDANT RECEPTACLES, CORDS, STRAIN RELIEF, AND TWISTLOCK PLUGS AS NOTED ON PLAN. CONTACT BRIDGID DEFRAMCESHI EMAIL: BRIDGID1985@GMAIL.COM (800-639-7584) TO PURCHASE OEP BOX AND DROP CORD/RECEPTACLES. PROVIDE LIQUID-TIGHT CONDUIT WITH CONDUCTORS FOR DIRECT CONNECTED EQUIPMENT. CONDUIT SHALL NOT TOUCH THE FLOOR WHEN EQUIPMENT IS IN PLACE. USE SUPPORT GRIPS W/ SUPPORT HOOK ATTACHED TO SHELVING ABOVE AS NEEDED. PASS & SEYMOUR MODEL #FS075-U-GH5 OR EQUIVALENT.

ELECTRICAL KEYNOTES

82 PROVIDE A DOUBLE-GANG BOX FLUSH MOUNTED IN THE CEILING WITH A BLANK PLATE WITH HOLE FOR A DROP CORD. PROVIDE THE #12 DROP CORD (WITH STRAIN RELIEF AT THE BOX AND AT THE OUTLET BACKBOX) AND CONNECT THE CORD TO AN OUTLET BOX CONTAINING TWO 15 AMP IG (ORANGE) DUPLEX OUTLETS. OUTLET BOX TO BE MOUNTED TO THE OVERHEAD SHELVING AT THE PRINTER AND MONITOR MOUNTING BRACKET.

83 COORDINATE WITH THE EQUIPMENT SUPPLIER FOR THE CHASE LOCATIONS. ROUTE ONE SET OF CIRCUIT 'A' THRU 'H' AND POS CIRCUIT TO EACH JUNCTION BOX PROVIDED ABOVE CEILING. CONNECT TO PREWIRED LABELED CIRCUITS. ENSURE CIRCUITS ARE LABELED CORRECTLY FOR EACH PREWIRED OUTLET PROVIDED IN EACH CHASE.

86 PROVIDE SINGLE-GANG JUNCTION BOX WITH A 1" CONDUIT EXTENDING UP INTO THE CEILING SPACE FOR POS MONITOR(S). COVER PLATE PROVIDED BY OWNER'S POS SYSTEM VENDOR.

91 PROVIDE A SINGLE GANG BOX FLUSH MOUNTED IN THE CEILING FOR THE POS DATA PLATE (BY OTHERS) FOR THE SALAD PREP AREA POS MONITOR AND PRINTER.

92 3/4" FLEX PROVIDED FOR DATA CABLES IN CHASE.

93 PROVIDE ORANGE ISOLATED GROUND (IG) DUPLEX RECEPTACLE.

94 PROVIDE GROUND FAULT PROTECTION FOR THESE DEVICES VIA A GROUND FAULT CIRCUIT BREAKER IF LOCAL CODE DEFINES THIS A FOOD PREPARATION AREA.

95 USE TYPE MC CABLE FOR THE ISOLATED GROUND CIRCUIT: #12 HOT, NEUTRAL, GREEN GROUND, STRIPED ISOLATED GROUND. EACH 15 AMP HOMERUN SHALL BE DEDICATED TO A CIRCUIT BREAKER VIA DEDICATED CONDUCTORS WITHIN A CABLE ASSEMBLY. ALL MC CABLES SHALL BE RUN OVERHEAD ABOVE THE CEILING AND RACKED TOGETHER ON J-HOOKS. NO SPLICES IN ANY HOMERUN CABLES FROM FIRST RECEPTACLE TO BREAKER.

100 PROVIDE TWO GANG WEATHERPROOF JUNCTION BOX AND STAINLESS STEEL PLATE WITH 7/8" HOLE IN CENTER FOR PANIC BUTTON. LOCATE AT 48" AFF AND EXTEND 1/2" CONDUIT UP TO ABOVE ACCESSIBLE CEILING WITH CONDUIT SEAL FITTING. SEAL CONDUIT PENETRATION AT WIC/WIF CEILING.

101 PROVIDE SINGLE GANG BOX WITHOUT COVER PLATE FOR RECEIPT PRINTER. EXTEND 1/2" CONDUIT UP IN WALL TO ABOVE ACCESSIBLE CEILING.

134 PROVIDE A JUNCTION BOX WITH A 1" CONDUIT FOR DATA AND/OR SYSTEMS STUBBED UP INTO CEILING SPACE FOR APPROVED OPERATOR OPTIONAL EQUIPMENT.

151 PROVIDE J-BOX WITH 1" FLEX CONDUIT FROM ACCESSIBLE CEILING SPACE DOWN WALL TO ELECTRICAL CHASE IN MILLWORK STUBBED OUT AT 2"-4" AFF. PROVIDE 6' EXTRA FLEX CONDUIT COILED UP AT INSIDE FACE OF JAMB. ROUTE FLEX CONDUIT TO 6" X 6" J-BOX INSIDE MILLWORK CHASE. ROUTE BRANCH CIRCUIT'S FROM 6" X 6" J-BOX TO INDIVIDUAL PIECES OF EQUIPMENT FOR CIRCUITS WITHIN THE MILLWORK.

ELECTRICAL KEYNOTES

162 PROVIDE J-BOX AND EXPANSION RING FOR PRESSURE RELIEF VALVE ELECTRICAL CONNECTIONS TO THE WALK-IN COOLER/FREEZER. INSTALL PER MANUFACTUERER'S INSTRUCTIONS.

168 PROVIDE IN-SIGHT DISCONNECT SWITCH IF REQUIRED BY AHJ. OTHERWISE PROVIDE PAD-LOCKING DEVICE ON BRANCH BREAKER.

172 PROVIDE 6"H X 6"W JUNCTION BOX BEHIND MILLWORK ACCESS PANEL ON FRY WARMER SIDE. PROVIDE MC CABLE TO ADJACENT CIRCUITS WITHIN THE MILLWORK, AS INDICATED.

NOTE FOR GF TYPE RECEPTACLES IN KITCHEN/FOOD PREP AREAS:
THE CONTRACTOR SHALL PROVIDE GROUND FAULT CIRCUIT INTERRUPTER PROTECTION FOR PERSONNEL FOR ALL 125V - 250V RECEPTACLES SUPPLIED BY 120V SINGLE-PHASE BRANCH CIRCUITS 50 AMPS OR LESS, 208V SINGLE-PHASE BRANCH CIRCUITS 50 AMPS OR LESS, AND 208V THREE-PHASE BRANCH CIRCUITS 100 AMPS OR LESS. SEE FLOOR PLANS FOR ADDITIONAL INFORMATION.

NOTE FOR POS GF IN KITCHEN:
THE CONTRACTOR SHALL PROVIDE GROUND FAULT PROTECTION FOR ALL 120 VOLT, 15 AND 20 AMP ISOLATED GROUND RECEPTACLE OUTLET BRANCH CIRCUITS IN THE KITCHEN/FOOD PREPARATION AREAS. GROUND FAULT PROTECTION SHALL BE PROVIDED AT THE BREAKER VIA A GROUND FAULT TYPE BRANCH BREAKER. (GFCI TYPE ISOLATED GROUND RECEPTACLES ARE NOT AVAILABLE.)

NOTE:
RECEPTACLES FOR THE POS EQUIPMENT SHALL BE THE ONLY ITEMS THAT CONNECT TO PANEL-POS. THERE SHALL BE NO OTHER LOADS CONNECTED TO THIS ISOLATED GROUND PANEL AND, IF SO, SHALL BE REMOVED AND RECONNECTED TO ANOTHER PANELBOARD AT THE EXPENSE OF THE CONTRACTOR.

Chick-fil-A
5200 Buffington Road
Atlanta, Georgia
30349-2998

Kurzynske & Associates
2705 Lebanon Pike - Suite One
Nashville, Tennessee 37214
Telephone: (615) 255-5203

ALABAMA REGISTERED PROFESSIONAL ENGINEER MARK T. KURZYNSKE
06/21/24

CHICK-FIL-A VALLEY, AL

3215 20TH AVENUE
VALLEY, AL 36854

FSR#05772

BUILDING TYPE / SIZE: BTS LS BP
RELEASE: 23.09
PRINTED FOR
CONSTRUCTION

REVISION SCHEDULE

NO.	DATE	DESCRIPTION

CONSULTANT PROJECT # 24035.CC.S
DATE 03/27/2024
DRAWN BY ES

Information contained on this drawing and in all digital files produced for above named project may not be reproduced in any manner without express written or verbal consent from authorized project representatives.

SHEET
ENLARGED KITCHEN POWER PLAN

SHEET NUMBER
E-402

PLUMBING FIXTURE CONNECTION SCHEDULE

FIXTURE MARK	DESCRIPTION	MANUFACTURER	MODEL	FURNISHED BY	INSTALLED BY	CW	HW	FW	FW2	WASTE	VENT	ACCESSORIES & COMMENTS
111	STAINLESS STEEL UNDERMOUNT SINK	VOLLRATH	10101-1P	MWK	KEC	0"	0"	0"	0"	1 1/2"	1 1/2"	CONTRACTOR SHALL INSTALL SINK AND FAUCET SET AND MAKE FINAL CONNECTIONS. MCGUIRE 8912C POLISHED CHROME P-TRAP AND MCGUIRE LF175R20 STOPS WITH 20" CHROME PLATED 3/8" COPPER RISERS. SEE 355F.
350	WATER FILTER ARRAY	KINETICO PRO	CFA T1	KEC	PC	3/4"	0"	3/4"	3/4"	0"	0"	SEE DETAIL 2/P502.
355F	FAUCET - UNDERMOUNT SINK	TOTO	T24T51ET#CP	PC	PC	1/2"	1/2"	0"	0"	0"	0"	1.0 GPM AERATOR. ADJUST FAUCET OUTLET TEMPERATURE TO 110 DEGREES F (OR HIGHER AS REQUIRED BY LOCAL JURISDICTION).
360	HAND SINK	EAGLE GROUP	YCFA-HSAN-0004-00	KEC	PC	0"	0"	0"	0"	1 1/2"	1 1/2"	CONTRACTOR SHALL INSTALL WALL HUNG, STAINLESS STEEL SINK AND FAUCET SET AND MAKE FINAL CONNECTIONS. MCGUIRE LF175 SUPPLIES WITH STOPS AND A MCGUIRE 8912C POLISHED CHROME P-TRAP. SEE 360F.
360D	DUMP SINK	ATLANTA CUSTOM FABRICATORS	3ACF354	PC	PC	0"	0"	0"	0"	1 1/2"	0"	CONTRACTOR SHALL INSTALL WALL HUNG, STAINLESS STEEL SINK AND FAUCET SET AND MAKE FINAL CONNECTIONS. MCGUIRE LF175 SUPPLIES WITH STOPS PROVIDE WITH BASKET DRAIN AND PERFORATED SCRAP BASKET. SEE 360DF.
360DF	FAUCET - DUMP SINK	T&S BRASS	B-1146-CFA-VF05	PC	PC	1/2"	1/2"	0"	0"	0"	0"	ADJUST FAUCET OUTLET TEMPERATURE TO 110 DEGREES F. PROVIDE WALL ESCUTCHEON PLATE ACCESSORY.
360F	FAUCET - HAND SINK	TOTO	TEL165-C20E#CP	PC	PC	1/2"	1/2"	0"	0"	0"	0"	ADJUST FAUCET OUTLET TEMPERATURE TO 110 DEGREES F. PROVIDE WALL ESCUTCHEON PLATE ACCESSORY.
365	4-COMPARTMENT SINK	EAGLE GROUP	YCFA-314-18-4-19.5	KEC	PC	0"	0"	0"	0"	1 1/2"	2"	SEE 365 F1 & 365 F2. CONTRACTOR SHALL INSTALL SINK, ASSEMBLE & MOUNT TWO FAUCETS. AND MAKE FINAL CONNECTIONS. MCGUIRE LFST08 STOPS AND BRASSCRAFT 36" CHROME PLATED 1/2" OD COPPER RISERS MODEL 3-36AC (SUPPLIED BY HJC).
365 F1	FAUCET 1 - 4 COMP	T&S	B-2299-CR	PC	PC	1/2"	1/2"	0"	0"	0"	0"	CONTRACTOR SHALL INSTALL SINK, ASSEMBLE & MOUNT FAUCET, AND MAKE FINAL CONNECTIONS. PROVIDE WALL ESCUTCHEON PLATE ACCESSORY. MCGUIRE LFST08 STOPS AND BRASSCRAFT 36" CHROME PLATED 1/2" OD COPPER RISERS MODEL 3-36AC.INSTALL ADD-ON FAUCET WITH SPOUT AT BASE OF PRE-RINSE SPRAY. ASSEMBLE AND MOUNT ONE TWO-HANDLE FAUCET WITH DOUBLE JOINT SPOUT ON OPPOSITE SIDE. PROVIDE 1-1/2" SCHED 80 PVC (PIPE AND FITTINGS) INDIRECT WASTE LINES FROM EACH SINK BASIN TO FLOOR SINK FS-1, NO TRAPS REQUIRED. SEE K-SHEET ELEVATIONS FOR FAUCET LOCATIONS.
365 F2	FAUCET 2 - 4 COMP WITH SPRAY VALVE	T&S	B-0152-14-CRBCT (SPRAY VALVE: B-0107-C)	PC	PC	1/2"	1/2"	0"	0"	0"	0"	CONTRACTOR SHALL INSTALL SINK, ASSEMBLE & MOUNT FAUCET, AND MAKE FINAL CONNECTIONS. PROVIDE WALL ESCUTCHEON PLATE ACCESSORY. MCGUIRE LFST08 STOPS AND BRASSCRAFT 36" CHROME PLATED 1/2" OD COPPER RISERS MODEL 3-36AC. ASSEMBLE AND MOUNT ONE TWO-HANDLE FAUCET WITH PRE-RINSE RISER. PROVIDE 1-1/2" SCHED 80 PVC (PIPE AND FITTINGS) INDIRECT WASTE LINES FROM EACH SINK BASIN TO FLOOR SINK FS-1, NO TRAPS REQUIRED. SEE K-SHEET ELEVATIONS FOR FAUCET LOCATIONS.
367	VEGETABLE PREP SINK - DOUBLE BOWL	EAGLE GROUP	YCFA-0072-00	KEC	PC	0"	0"	0"	0"	1 1/2"	0"	PROVIDE 1-1/2" SCHED 80PVC (PIPE AND FITTINGS) INDIRECT WASTE LINES FROM SINK BASINS TO FLOOR SINK FS-2. HJC TO SUPPLY FISHER #22209 DRAINS WITH FLAT STRAINERS.
367F	FAUCET WITH SPRAY VALVE - VEG PREP	T&S	B-0152-14-CRBCT (SPRAY VALVE: B-0107-C)	PC	PC	1/2"	1/2"	0"	0"	0"	0"	CONTRACTOR SHALL INSTALL SINK AND MAKE FINAL CONNECTIONS. MCGUIRE LFST08 STOPS AND BRASSCRAFT 36" CHROME PLATED 1/2" OD COPPER RISERS MODEL 3-36AC. PROVIDE WALL ESCUTCHEON PLATE ACCESSORY.
380	ICE MAKER	MCGUIRE	LFHST06SB	PC	PC	0"	0"	0"	1/2"	0"	0"	UTILITY CONNECTION: LEAD FREE CHROME WHEEL ANGLE STOP. 1/2" FIP INLET AND OUTLET. PROVIDE CHROME WALL ESCUTCHEON. INSTALL WITH BFP. SEE DETAIL 7/P-501 FOR PIPING AT ICE MAKERS.
BV-1	BALL VALVE	BELL & GOSSETT	TSB-1/2(C)	PC	PC	0"	1/2"	0"	0"	0"	0"	THERMOSTATIC BALANCING VALVE W/ MANUAL BYPASS. SET TEMPERATURE TO 130 DEGREES F. FOR 3/4" SIZING USE MODEL TSB-3/4(C).
CV-1	MOP SINK CHECK VALVE	T&S	B-CVV1-2	PC	PC	1/2"	1/2"	0"	0"	0"	0"	LEAD FREE, BRASS MODEL.
DCV-1	DUAL CHECK VALVE WITH ATMOSPHERIC VENT - ICE MAKER	WATTS	LF7RU2-2	PC	PC	0"	0"	0"	3/8"	0"	0"	PIPE DCV VENT TO FLOOR DRAIN.
DCV-2	DUAL CHECK VALVE WITH ATMOSPHERIC VENT - COFFEE AND TEA	WATTS	SD-2	PC	PC	0"	0"	3/8"	0"	0"	0"	PIPE DCV VENT TO FLOOR DRAIN.
EEW-1	EMERGENCY EYE WASH	ACORN	S0660-RH	PC	PC	1/2"	1/2"	0"	0"	0"	0"	BRADLEY MODEL S19-200R000 THERMOSTATIC TEMPERING VALVE. ANSI Z358.1 CERTIFIED FOR EMERGENCY FIXTURES, ASSE 1071 COMPLIANT, WITH DIAL THERMOMETER, INLET CHECK STOPS, ADJUSTABLE SETPOINT, ACCURATE WITHIN +/- 3 DEG F. INCLUDES INTEGRAL COLD WATER BYPASS WITH POSITIVE HOT WATER SHUT OFF WHEN COLD WATER SUPPLY IS LOST. FACTORY SETPOINT OF 85 DEG F. MOUNTING BRACKET INCLUDED. FACTORY ASSEMBLED AND TESTED. ROUGH BRASS FINISH.
ET-1	EXPANSION TANK	A.O. SMITH	TW12-5	PC	PC	3/4"	0"	0"	0"	0"	0"	ACCEPTANCE 2.19 GALLONS AT 40 PSI PRECHARGE. ALTERNATE MODELS SIZED PER WATER HEATER MANUFACTURER RECOMMENDATIONS ARE ACCEPTABLE. ALT: AMTROL: ST-12.
F-1	FAUCET - TROUGH SINK	TOTO	T24S51E#CP	PC	PC	1/2"	1/2"	0"	0"	0"	0"	ECO-POWER SENSOR HOT/COLD FAUCET WITH THERMOSTATICALLY CONTROLLED ASSE 1070 MIXING VALVE FAUCET. NO SUBSTITUTIONS.
F-3	FAUCET - MOP SINK	T&S	B-2345	PC	PC	1/2"	1/2"	0"	0"	0"	0"	WITH CERAMA SPRING CHECK VALVE CARTRIDGES, HOSE THREAD SPOUT OUTLET, TOP BRACE, ADJUSTABLE INLET SPREAD FROM 3" TO 8". INCLUDE T&S BRASS MODEL 43-072 HOSE THREAD X 3/4" FEMALE NPT CHROME ADAPTOR. NO SUBSTITUTIONS.
F-4	FAUCET - FILTERED WATER - JUICING TABLE	T&S	B-0599-CR	PC	PC	0"	0"	1/2"	0"	0"	0"	TWO HANDLE WALL MOUNT FAUCET WITH SWING SPOUT. MOUNT ON WALL AS SHOWN ON K SHEETS. PIPE FILTERED WATER TO BOTH SIDES OF FAUCET. CONNECT TO SUPPLY PIPING WITH BRASS OR CHROME NIPPLES, GALVANIZED NOT ALLOWED.
FCO	FLOOR CLEANOUT	ZURN	ZN1400-XNL-T-BP	PC	PC	0"	0"	0"	0"	4"	0"	CLEANOUT SQUARE WITH 6" NICKEL BRONZE TOP AND TAPER THREAD BRONZE PLUG. SEE PLAN FOR WASTE SIZE.
FD-1	KITCHEN AREA DRAIN	ZURN	EZ1-PV3-R8	PC	PC	0"	0"	0"	0"	3"	2"	BRONZE SPUD WITH 8" DIAMETER NICKEL BRONZE STRAINER. ALT: JONES STEPHENS CORP D53-144.
FD-2	FUNNEL DRAIN	ZURN	ZN415E-SC-VP	PC	PC	0"	0"	0"	0"	3"	2"	INDIRECT WASTE RECEIVER WITH NICKEL BRONZE STRAINER AND FUNNEL. PROVIDE 6" SQUARE STRAINER WITH 4" (ZURN- ZN328-4) ROUND FUNNEL AT ICE MACHINE & WALK-IN COOLER (SUPPLIED BY HJC).
FD-3	FLOOR DRAIN WITH FUNNEL	ZURN	ZN415-3NL-8S-OF	PC	PC	0"	0"	0"	0"	3"	2"	INDIRECT WASTE RECEIVER WITH NICKEL BRONZE STRAINER AND FUNNEL. PROVIDE 6" SQUARE STRAINER WITH 4" (ZURN- ZN328-4) ROUND FUNNEL.
FD-5	FLOOR DRAIN - TOILET ROOMS/MOP SINK	ZURN	EZ1-PV3-R6	PC	PC	0"	0"	0"	0"	3"	2"	BRONZE SPUD WITH 6" DIAMETER NICKEL BRONZE STRAINER. ALT: JONES STEPHENS CORP D50-064.
FD-7	FLOOR DRAIN - DINING ROOM	ZURN	EZ1-PV3-S6	PC	PC	0"	0"	0"	0"	3"	2"	BRONZE SPUD WITH 6" SQUARE NICKEL BRONZE STRAINER. ALT: JONES STEPHENS CORP D50-077.
FS-1	FLOOR SINK - 4-COMPARTMENT	ZURN	Z1901-4NL-1-23-KC	PC	PC	0"	0"	0"	0"	3"	3"	INDIRECT WASTE RECEIVER WITH 12" SQUARE BODY, FLASHING CLAMP, 8" SQ. BODY, ALUMINUM SEDIMENT BUCKET, AND NO GRATE.
FS-2	FLOOR SINK - VEGETABLE PREP SINK	ZURN	Z1910-KC-2-23	PC	PC	0"	0"	0"	0"	3"	2"	INDIRECT WASTE RECEIVER WITH FLASHING CLAMP, 8" SQ. BODY, ALUMINUM SEDIMENT BUCKET, AND NO GRATE.
FS-3	FLOOR SINK - DUMP SINK	ZURN	Z1910-KC-2-23	PC	PC	0"	0"	0"	0"	3"	3"	INDIRECT WASTE RECEIVER, NEO-LOC OUTLET, ANCHOR FLANGE WITH SEEPAGE HOLES AND CLAMP COLLAR, WITH HALF GRATE, AND ALUMINUM BUCKET.
FS-4	FLOOR SINK - BEV COND	ZURN	Z1901	PC	PC	0"	0"	0"	0"	3"	3"	2" CONNECTION, INDIRECT WASTE RECEIVER, WITH HALF GRATE, STAINLESS STEEL MESH LINER AND ALUMINUM BUCKET.
FV-1	FLUSH VALVE - WATER CLOSET	TOTO	TET1LA32#CP	PC	PC	1 1/2"	0"	0"	0"	0"	0"	1.28 GPF ECO-POWER SELF-GENERATING ELECTRONIC SENSOR-OPERATED FLUSH VALVE.
FV-2	FLUSH VALVE - URINAL	TOTO	TEU1UA12#CP	PC	PC	3/4"	0"	0"	0"	0"	0"	0.125 GPF SELF SUSTAINED HYDROPOWER SELF-GENERATING ELECTRONIC SENSOR-OPERATED FLUSH VALVE.
GI-1	GREASE INTERCEPTOR (1500 GALLONS)	-	-	PC	PC	0"	0"	0"	0"	4"	2"	CONCRETE GREASE INTERCEPTOR.
HB-1	HOSE BIBB / WALL HYDRANT	WOODFORD	67C	PC	PC	3/4"	0"	0"	0"	0"	0"	AUTOMATIC DRAINING HOSE BIBB WITH DUAL CHECK BFP, ASSE 1052 APPROVED, WALL CLAMP, POLISHED BRASS FINISH. "C" STYLE INLET. ALT (WTS) HY-42.
LAV-1	SOLID SURFACE TROUGH SINK	CLAYTON FIXTURES	-	OWN	PC	0"	0"	0"	0"	1 1/2"	1 1/2"	
P-1	RECIRCULATING PUMP	GRUNDFOS	GTK03	PC	PC	0"	3/4"	0"	0"	0"	0"	HOT WATER CIRCULATING PUMP (TANKLESS WH): GRUNDFOS MODEL GTK03 PUMP KIT. 3/4" UNION CONNECTIONS. ELECTRICIAN TO PROVIDE AND WIRE PLUG AND CORD, 1/40 HP, 3 GPM AT 7 FT TOTAL DYNAMIC HEAD. KIT INCLUDES 6 FT BX PRE-WIRED CONDUIT, FLANGE KIT, AND RINNAI CIRC-LOGIC MANUAL,. SET SHUT-OFF TEMP AT 100 DEGREES F.
P-2	BOOSTER PUMP	GRUNDFOS	CME15-2 PLUS P-S-E-R-AQQE V-A-D-N	PC	PC	2"	0"	0"	0"	0"	0"	2" INLET AND 2" DISCHARGE WITH 1 LITER DIAPHRAGM TANK. 5 HP PUMP SYSTEM SHALL BE CAPABLE OF 70 GPM @ 40 PSI. 304 STAINLESS STEEL PUMP BODY AND IMPELLER. NSF 61 APPROVED. 208V / 3PH / 60 HZ, 13.2 AMPS.
PG-1	PRESSURE GAUGE	TRERICE	800B	PC	PC	1/2"	0"	0"	0"	0"	0"	2-1/2" ROUND, BOTTOM OUTLET WITH 1/4" N.P.T. CONNECTION AND 0 TO 100 PSI RANGE.
PRV-1	PRESSURE REDUCING VALVE	WATTS	LF223-S-B	PC	PC	2"	0"	0"	0"	0"	0"	NOTE TO DESIGNER: PROVIDE ONLY WHEN WATER PRESSURE AT BUILDING EXCEEDS 80 PSIG OR WHEN USING A BOOSTER PUMP. WITH BUILT-IN BYPASS FEATURE. SET NO FLOW CONDITION AT 70 PSI. ALT: (ZRN) SERIES 500XLYSBR.
RPZ-1	REDUCED PRESSURE ZONE ASSEMBLY	WATTS	LFU009M2	PC	PC	2"	0"	0"	0"	0"	0"	COORDINATE LOCATION WITH CIVIL SITE UTILITY PLAN. REDUCED PRESSURE ZONE (RPZ): MODULAR TYPE WITH TEST PORTS AND INTERMEDIATE RELIEF VALVE MEETING ASSE 1012 AND AWWA C511-89. (ANY AND ALL ALTERNATES SUPPLIED BY HJC).
ST-1	WYE STRAINER	WATTS	LF777SM3-2	PC	PC	2"	0"	0"	0"	0"	0"	BRONZE WYE STRAINER WITH THREADED CONNECTION AND TAPPED RETAINER CAP. PROVIDE #100 MESH SCREEN. PROVIDE WATTS 1/2" LFBD-1C BRASS BOILER DRAIN WITH BRASS STREET 90 DEGREE ELBOW
TD-1	TRENCH DRAIN - 700 LB. ICE BIN	ZURN	TR12-CFA-18	PC	PC	0"	0"	0"	0"	3"	2"	STAINLESS STEEL TRENCH DRAIN, 14.5"X18" STAINLESS STEEL SEDIMENT CUP AND STAINLESS STEEL SERRATED LADDER GRATE.
TD-2	TRENCH DRAIN - 1300 LB. ICE BIN	ZURN	TR12-CFA-36	PC	PC	0"	0"	0"	0"	3"	2"	STAINLESS STEEL TRENCH DRAIN, 14.5"X36" STAINLESS STEEL SEDIMENT CUP AND STAINLESS STEEL SERRATED LADDER GRATE.
TH-1	THERMOMETER	TRERICE	B83404-04	PC	PC	1/2"	1/2"	0"	0"	0"	0"	3" DIAL THERMOMETER WITH BOTTOM 1/2" N.P.T. CONNECTION. 4" STEM AND 0 DEG F TO 200 DEG F RANGE.
TP-1	TRAP PRIMER WITH 4-WAY DISTRIBUTION	PPP	PR-500 W/ DU-U	PC	PC	0"	0"	0"	0"	3"	0"	PROVIDE DISTRIBUTION UNIT WHERE SERVING MULTIPLE DRAINS. PROVIDE SCREWDRIVER STOP AT PRIMER INLET. ALTERNATE: (WTS) TP-300A-DR.
UR-1	URINAL - WASHOUT	TOTO	UT445UG#01	PC	PC	0"	0"	0"	0"	2"	2"	SEE FV-2. 3/4" TOP SPUD, SENSOR OPERATED WITH MANUAL OVERRIDE BUTTON, INTERNAL VALVE FILTER PROTECTION.
V-1	SUPPLY VALVE - DISHWASHER	WATTS	3/4 S-FBV-1	PC	PC	3/4"	0"	0"	0"	0"	0"	FULL-PORT LEAD-FREE STAINLESS STEEL BALL VALVE(S) WITH SPLIT-RING BRACKET, CHROME FITTINGS, PIPE NIPPLES AND ESCUTCHEON.
V-2	SUPPLY VALVE - RETHERMALIZER	WATTS	1/2 S-FBV-1	PC	PC	1/2"	0"	0"	0"	0"	0"	FULL-PORT LEAD-FREE STAINLESS STEEL BALL VALVE(S) WITH SPLIT-RING BRACKET, CHROME FITTINGS, PIPE NIPPLES AND ESCUTCHEON.
V-3	BALL VALVE	NIBCO	4660-T	PC	PC	0"	0"	3/4"	0"	0"	0"	ISOLATION BALL VALVE (8-STOP WATER MANIFOLD PANEL). WITH IPS INLET AND OUTLET.
V-4	3-WAY DIVERTER VALVE	WATTS	LFB 6780	PC	PC	1/2"	0"	0"	0"	0"	0"	ROUGH BRASS LEAD-FREE DIVERTER BALL VALVE WITH 3/4" FIP INLET AND OUTLETS AND QUARTER TURN LEVER HANDLE. PROVIDE WITH TWO FORGED BRASS 3/4" MIP X 3/4" MALE GARDEN HOSE THREAD ADAPTERS. PROVIDE WITH ONE ASSE 1011 APPROVED CHROME PLATED VACUUM BREAKER. ALSO PROVIDE TWO 3/4" CLOSE CHROME PLATED BRASS NIPPLE AND 3/4" POLISHED CHROME 90 DEG ELBOW.
V-5	TEA BREWER / COFFEE MAKER	MCGUIRE	LFHST06SB	PC	PC	0"	0"	1/2"	0"	0"	0"	LEAD FREE CHROME WHEEL ANGLE STOP, 1/2" FIP INLET AND OUTLET FOR TEA BREWER (KEQ#305) AND COFFEE MAKER (KEQ#308). INSTALL WITH BFP. PROVIDE ESCUTCHEON PLATE AT PIPE PENETRATION.
VRV-1	VACUUM RELIEF VALVE	WATTS	LFN36M1	PC	PC	3/4"	0"	0"	0"	0"	0"	(SUPPLIED BY HJC).
WC-1	WATER CLOSET	TOTO	CT705UN#01	PC	PC	0"	0"	0"	0"	3"	2"	SEE FV-1. PROVIDE WITH SC534 SEAT. NO SUSBSTITUTIONS. WHITE, FLOOR MOUNTED, FLUSH VALVE TYPE. VITREOUS CHINA, 1-1/2" TOP SPUD, ELONGATED BOWL, WHITE OPEN FRONT SEAT WITH CHECK HINGE.
WC-2	WATER CLOSET - ADA	TOTO	CT705ULN#01	PC	PC	0"	0"	0"	0"	3"	2"	SEE FV-1. PROVIDE WITH SC534 SEAT. NO SUSBSTITUTIONS. H.C. ACCESSIBLE, WHITE, FLOOR MOUNTED, 17-1/2" HIGH, FLUSH VALVE TYPE, VITREOUS CHINA, 1-1/2" TOP STUD, ELONGATED BOWL, WHITE OPEN FRONT SEAT WITH CHECK HINGE, AND NO OFFSET TOILET FLANGES.
WH-1	TANKLESS WATER HEATER	RINNAI	CU-199i	PC	PC	1"	1"	0"	0"	0"	0"	199MBH INPUT, DIRECT CONCENTRIC VENTED, WITH TWO-UNIT CONFIGURATION. INCLUDE CONDENSATE NEUTRALIZATION KIT WITH MEDIA. OFFSET WALL BRACKET ACCESSORY MODEL NUMBER: TRX02CUIN. 5.4 GPM MAXIMUM FLOW RATE AT 70 DEG RISE. SUPPLY WITH TWO RINNAI SCALE CONTROL SYSTEMS. PROVIDE WITH 8 YEAR HEAT EXCHANGER WARRANTY, 5 YEAR OTHER PARTS AND COMPONENTS WARRANTY, AND 1 YEAR LABOR WARRANTY. CONTRACTOR TO PROVIDE DIELECTRIC HEAT TRAP NIPPLES. NO SUBSTITUTIONS.
WHA-1	WATER HAMMER ARRESTOR	ZURN	Z1700	PC	PC	0"	0"	0"	0"	0"	0"	ZURN Z1700-100 THRU Z1700-300 AS NEEDED, SIZE AS RECOMMENDED BY MANUFACTURER. ALT: (WTS) SSA + SSB: (JRS 5005 THRU 5050).
YCO-1	YARD CLEANOUT - DRIVEWAYS	ZURN	Z1474-N	PC	PC	0"	0"	0"	0"	4"	0"	EXTRA HEAVY DUTY CAST IRON CLEANOUT, "C.O." CAST IN COVER, ABS PLUG, NEO-LOOCK OUTLET. ALT: (ZURN) Z1474-X-N. SEE PLAN FOR WASTE SIZE.

Chick-fil-A
5200 Buffington Road
Atlanta, Georgia
30349-2998

Kurzynske & Associates
2705 Lebanon Pike - Suite One
Nashville, Tennessee 37214
Telephone: (615) 255-5203

ALABAMA REGISTERED PROFESSIONAL ENGINEER MARK T. KURZYNSKE NO. 20714
06/21/24

CHICK-FIL-A
VALLEY, AL
3215 20th Avenue
VALLEY, AL 36854

FSR#05772

BUILDING TYPE / SIZE: BTS LS BP
RELEASE: 23.09
PRINTED FOR
CONSTRUCTION

REVISION SCHEDULE

NO.	DATE	DESCRIPTION

CONSULTANT PROJECT # 24035.CC.S
DATE 03/20/2024
DRAWN BY CH

Information contained on this drawing and in all digital files produced for above named project may not be reproduced in any manner without express written or verbal consent from authorized project representatives.

SHEET
PLUMBING SCHEDULES

SHEET NUMBER
P-601

6/21/2024 10:21:38 AM Autodesk Docs://AL_05772_Valley_2024-2_BTS/05772_Valley_PLB.rvt
40-LS-05772-P-601-PLUMBING SCHEDULES

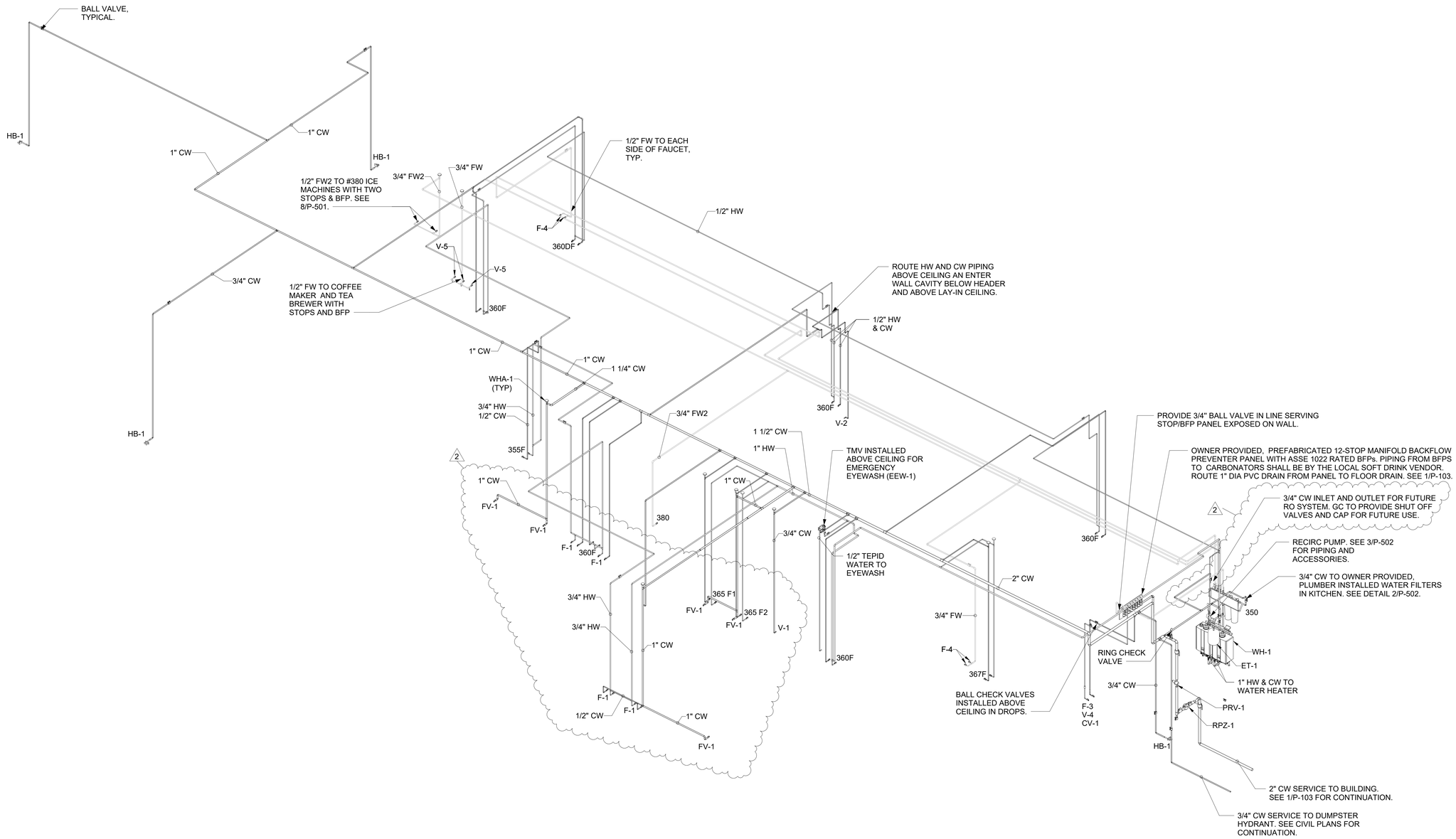

1 WATER DISTRIBUTION ISOMETRIC

Chick-fil-A
5200 Buffington Road
Atlanta, Georgia
30349-2998

Kurzynske & Associates
2705 Lebanon Pike - Suite One
Nashville, Tennessee 37214
Telephone: (615) 255-5203

ALABAMA REGISTERED PROFESSIONAL ENGINEER MARK T. KURZYNSKE No. 20714
06/21/24

CHICK-FIL-A
VALLEY, AL

3215 20th Avenue
VALLEY, AL 36854

FSR#05772

BUILDING TYPE / SIZE: BTS LS BP
RELEASE: 23.09
PRINTED FOR
CONSTRUCTION

REVISION SCHEDULE

NO.	DATE	DESCRIPTION
2	06/21/2024	Construction Set

CONSULTANT PROJECT # 24035.CC.S
DATE 03/20/2024
DRAWN BY CH

Information contained on this drawing and in all digital files produced for above named project may not be reproduced in any manner without express written or verbal consent from authorized project representatives.

SHEET
WATER DISTRIBUTION ISOMETRIC

SHEET NUMBER
P-902

6/21/2024 10:21:42 AM Autodesk Docs://AL_05772_Valley_2024.2_BTS/05772_Valley_P_LB.rvt
40-LS-05772-P-902-WATER DISTRIBUTION ISOMETRIC

DIVISION 15 SPECIFICATIONS

PART I - PRODUCTS

1.01 GENERAL REQUIREMENTS

A. THE FOLLOWING SPECIFICATIONS ARE THE MINIMUM REQUIREMENT. WHERE FEDERAL, STATE OR LOCAL REQUIREMENTS DIFFER FROM THIS SPECIFICATION, THE MORE STRINGENT OF THE TWO SHALL BE FOLLOWED.

1.02 SCOPE

A. HOT AND COLD POTABLE WATER PIPING ABOVE SLAB SHALL BE TYPE 'L' HARD DRAWN COPPER OR FLOWGUARD GOLD CPVC AS MANUFACTURED BY NIBCO OR CHARLOTTE PIPE & FOUNDRY AND MEETING ASTM D-2846. FILTERED WATER PIPING SHALL BE FLOWGUARD GOLD CPVC. HOT AND COLD PIPING WITHIN WALLS BEHIND KITCHEN HOODS SHALL BE COPPER.

B. POTABLE WATER PIPING BELOW SLAB AND OUTSIDE BELOW GRADE SHALL BE TYPE "K" SOFT ANNEALED SEAMLESS. NO JOINTS SHALL BE ALLOWED BELOW SLAB. POTABLE WATER PIPING BELOW GRADE SHALL BE SLEEVED FOR ITS ENTIRE LENGTH WITH POLY SLEEVE AS MADE BY IPS WATER-TITE. ALL SLAB PENETRATIONS SHALL BE SLEEVED WITH POLY SLEEVE TO PROTECT PIPING FROM CORROSION BY CONCRETE.

C. COPPER PIPE FITTINGS SHALL BE JOINED USING 95-5 LEAD-FREE SOLDER MEETING ASTM B-32 OR BRAZED WITH SIL-FOS. SOLDER FLUXES SHALL MEET ASTM B-813 AND SHALL BE LEAD FREE. BRAZING FLUXES SHALL MEET AWS FB3-A OR FB3-C.

D. WATER PIPING DOWNSTREAM OF SOFT DRINK CARBONATORS SHALL BE PROVIDED AND INSTALLED BY LOCAL SOFT DRINK VENDOR.

E. CPVC FITTINGS FOR PIPING SHALL BE SOLVENT WELD TYPE MEETING ASTM D-2846 WITH CEMENTS MEETING ASTM F-493 AND PRIMER MEETING ASTM F-656. CURE TIME MUST COMPLY WITH MANUFACTURER'S RECOMMENDATIONS. FOR CPVC PIPING INSTALLATION, WALL STUBS AT FIXTURES AND EQUIPMENT SHALL BE COPPER AND SHALL BE SERIES 630-C. CPVC-TO-COPPER STUB OUT ELBOWS BY SIOUX CHIEF.

F. OTHER ACCESSORY FITTINGS REQUIRED TO COMPLETE ANY WATER PIPING CONNECTION SHALL BE BRASS OR OF SIMILAR TYPE METAL AS THE FITTING TO WHICH IT IS CONNECTED. GALVANIZED FITTINGS ARE PROHIBITED. (EXCEPTION: GALVANIZED HEAT TRAP WATER HEATER NIPPLES IF INTERNALLY PROTECTED WITH TEFLON OR POLYMER CORROSION-RESISTANT COATING.)

G. ALL HVAC CONDENSATE PIPING SHALL BE SCHEDULE 40 PVC DWV AS MANUFACTURED BY CHARLOTTE PIPE AND MEETING ASTM D-1784, D-1785 AND D-2665.

H. ALL SANITARY WASTE, VENT, STORM DRAINAGE PIPING AND FITTINGS INSIDE THE BUILDING, ABOVE AND BELOW GRADE, AND FOR ROOFTOP CONDENSATE, SHALL BE SOLID WALL SCHEDULE 40 PVC DWV AS MANUFACTURED BY CHARLOTTE PIPE AND MEETING ASTM D-2665 AND D-2949. FOAM CORE AND/OR CELLULAR CORE PVC PIPING SHALL NOT BE ALLOWED. PVC PIPING OUTSIDE THE BUILDING, BELOW GRADE, SHALL BE TYPE SDR-35 MEETING ASTM D-3034, U.N.O.

I. DWV PIPE AND FITTINGS WITHIN WALLS BEHIND KITCHEN HOODS SHALL BE SERVICE WEIGHT HUBLESS CAST IRON WITH SLEEVE, SHIELD, AND DRAWBAND JOINTS MEETING ASTM A-888 AND ASTM C-564.

J. PVC-DWV FITTINGS FOR PIPING SHALL BE SOLVENT WELD TYPE INSIDE AND UNDERSLAB MEETING ASTM D-2665, D-3311 AND F-186. CEMENTS SHALL MEET ASTM D-2564 AND PRIMER MEETING ASTM F-656. CURE TIME MUST COMPLY WITH MANUFACTURER'S RECOMMENDATIONS. EXTERIOR PIPING JOINTS SHALL BE NEOPRENE PUSH-ON TYPE.

K. PROVIDE 1" THICK PIPE INSULATION FOR ALL ABOVE SLAB HOT AND TEMPERED WATER PIPING. PROVIDE 1/2" THICK INSULATION FOR ALL ABOVE SLAB COLD WATER, FILTERED WATER, CONDENSATE PIPING, AND HORIZONTAL RAIN WATER CONDUCTORS INSIDE THE BUILDING. PIPING INSULATION SHALL BE KNAUF 1000F 25/50 FIBERGLASS PIPE COVERING, WHITE KRAFT PAPER VAPOR BARRIER (.02 PERMS) BONDED TO ALUMINUM FOIL AND REINFORCED WITH GLASS FIBERS. MAXIMUM THERMAL CONDUCTIVITY OF 0.23 AT 75F. LONGITUDINAL LAP SHALL BE SELF SEALING. INSULATION FOR WALK-IN COOLER/FREEZER CONDENSATE PIPING SHALL BE ARMACELL A/P ARMAFLEX WITH MINIMUM 3/4" WALL THICKNESS.

L. PIPE INSULATION AND COVERINGS SHALL HAVE A RATING OF NOT GREATER THAN 25 FLAME SPREAD, NO HIGHER THAN 50 SMOKE DEVELOPED, AND NO MORE THAN 50 FUEL CONTRIBUTED. THE ONLY EXCEPTION SHALL BE ARMAFLEX AP, WHEN SPECIFIED, WHICH SHALL NOT EXCEED 100 SMOKE DEVELOPED.

M. A PVC 25/50 PRE-FORMED COVER SHALL BE PROVIDED AT ALL INSULATED PIPING FITTINGS EQUAL TO PROTO PVC CORP LOSMOKE, 800-875-7768.

N. EXPOSED SUPPORTS AND ATTACHMENTS SHALL BE STAINLESS STEEL, CHROME OR CHROME PLATED. GALVANIZED ATTACHMENTS WILL NOT BE ACCEPTED.

O. USE MATERIALS SPECIFIED ON THESE PLANS. SUBSTITUTIONS ARE ALLOWED ONLY IF SPECIFIED MATERIALS ARE UNAVAILABLE. PRODUCT SUBSTITUTIONS WILL NOT BE ACCEPTED WITHOUT PRIOR APPROVAL. ALL WATER PIPING, FITTINGS, FIXTURES AND ACCESSORIES SHALL BE CERTIFIED LEAD FREE AS DEFINED IN, AND PER THE INTENT OF, THE "REDUCTION IN LEAD IN DRINKING WATER ACT".

PART II - EXECUTION

2.01 TRENCHING

A. EXCAVATION, BACKFILLING, AND TRENCH WORK SHALL BE DONE IN ACCORDANCE WITH LATEST O.S.H.A. AND APPLICABLE SAFETY STANDARDS.

B. PROVIDE NECESSARY SHORING AND CLEANING TO KEEP TRENCHES IN GOOD WORKING CONDITION, INCLUDING PUMPING OUT WATER.

C. IN MOSTLY ROCK MATERIAL, TRENCHES SHALL BE EXCAVATED TO 6" BELOW THE ELEVATION OF THE BOTTOM OF THE PIPES. AFTER EXCAVATION, TRENCH SHALL THEN BE FILLED TO THE PROPER ELEVATION WITH CRUSHED LIMESTONE. GRAVEL SHALL BE REMOVED FROM UNDER PIPE BELLS SO THE PIPE RESTS FIRMLY ON THE TRENCH BOTTOM.

D. IN MOSTLY EARTH OR SAND MATERIAL, TRENCHES SHALL BE EXCAVATED TO 6" BELOW THE ELEVATION OF THE BOTTOM OF THE PIPES. AFTER EXCAVATION, TRENCH SHALL THEN BE FILLED TO THE PROPER ELEVATION WITH FINE SAND OR GRAVEL. TRENCH BOTTOM SHALL BE REMOVED AT PIPE BELLS SO THE PIPE RESTS FIRMLY ON THE TRENCH BOTTOM.

E. BACKFILLING AND TAMPING SHALL BE CAREFULLY DONE BY HAND SIMULTANEOUSLY ALONG BOTH SIDES OF THE PIPE USING ROCK FREE EARTH, CRUSHED STONE OR SAND UNTIL THE PIPE IS COVERED TO A DEPTH OF AT LEAST 12". BACKFILL SHALL BE ACCOMPLISHED IN SUCCESSIVE 6" LAYERS. THE REST OF THE FILL-UP TO THE TOPSOIL LAYER MAY BE GRAVEL OR ROCK FREE EARTH.

F. ACCEPTABLE SOIL MATERIALS FOR BACKFILL AND FILL SHALL BE FREE OF CLAY, ROCK OR GRAVEL LARGER THAN 2" IN ANY DIMENSION, DEBRIS, WASTE, FROZEN MATERIALS AND OTHER DELETERIOUS MATTER HAVING A PLASTICITY INDEX LESS THAN 30. BACKFILL SHALL BE ACCOMPLISHED IN LAYERS OF NOT MORE THAN 6" AND EACH LAYER SHALL BE COMPACTED. THE LAST 12" OF BACKFILL SHALL BE ROCK FREE TOPSOIL.

G. SURFACE SHALL BE RESTORED TO ITS ORIGINAL CONDITION.

2.02 INSTALLATION

A. WATER PIPING IN EXTERIOR WALL SHALL BE INSTALLED ON THE HEATED SIDE OF WALL INSULATION.

B. EXPOSED HOT AND COLD WATER TRIM FITTINGS AND ACCESSORIES IN FINISHED AREAS SHALL BE CHROME FINISHED.

C. ACCEPTABLE METHODS OF PIPE SUPPORT WITHIN WALLS SHALL BE THE SUMNER SYSTEM, POSIFIX, STAKFIX, PIPEFIX, HOLDRITE OR CHANNEL.

D. PROVIDE J.R. SMITH OR APPROVED EQUAL SHOCK ABSORBERS #5005 THRU 5050 SIZE AS RECOMMENDED BY MANUFACTURER INSTALLED ON HOT AND COLD WATER BRANCH LINES CONTAINING SINGLE LEVER FAUCETS, FLUSH VALVES OR EQUIPMENT WITH QUICK CLOSING VALVES BETWEEN THE LAST TWO FIXTURES AS SHOWN ON THE CONTRACT DRAWINGS. SHOCK ABSORBERS SERVICING FIXTURES WITH FLUSH VALVES SHALL BE SECURELY ANCHORED IN THEIR VERTICAL POSITION.

E. SANITARY WASTE LINES SHALL BE UNIFORMLY GRADED TO ELEVATIONS SHOWN. IF NO ELEVATIONS ARE GIVEN, SEWERS SHALL BE PITCHED NOT LESS THAN 1/4" PER FOOT FOR ALL PIPING 2-1/2" IN DIAMETER AND SMALLER AND 1/8" PER FOOT FOR ALL PIPING 3" IN DIAMETER AND LARGER.

F. STORM PIPING SHALL BE SLOPED AT 1/4" PER FT (2%) UNLESS NOTED OTHERWISE ON PLANS.

G. SUPPORT HORIZONTAL PIPING ACCORDING TO LOCAL PLUMBING CODE. HANGER RODS SHALL BE SIZED AS FOLLOWS:

NOMINAL PIPE SIZE (IN)	MINIMUM HANGER DIAMETER (IN)
1/2	3/8
3/4 TO 1-1/2	3/8
2 TO 2-1/2	3/8
3 TO 6	1/2

H. HANGERS FOR PIPING GREATER THAN 1" SHALL PASS OVER THE INSULATION. PROVIDE SADDLES FOR INSULATED PIPING.

I. INSULATION SHALL BE APPLIED WITH JOINTS TIGHTLY BUTTED. OPEN CRACKS, VOIDS AND DEPRESSIONS SHALL BE FILLED WITH HYDRAULIC SETTING CEMENT. LAPPING MATCHING THE FINISH SHALL BE PASTED NEATLY OVER JOINTS. FITTINGS AND VALVES SHALL BE INSULATED WITH THE SAME TYPE.

J. COORDINATE ABOVE-CEILING PIPING LOCATIONS AND ROUTING WITH HVAC CONTRACTOR AND M-SHEETS PRIOR TO INSTALLATION. ALL MAIN DUCT TRUNK LOCATIONS SHALL TAKE PRIORITY. PIPING MAY REQUIRE REMOVAL AND REINSTALLATION AT PLUMBING CONTRACTOR'S EXPENSE IF PIPING OBSTRUCTS THE M-SHEET DUCT LAYOUT AS SHOWN OR PREVENTS ACCESS TO GREASE DUCT CLEANOUT OPENINGS.

2.03 TESTING

A. POTABLE WATER PIPING SHALL BE PRESSURE TESTED IN ACCORDANCE WITH APPLICABLE CODE REQUIREMENTS AND MANUFACTURERS RECOMMENDATIONS.

B. THE POTABLE WATER SYSTEM SHALL BE FLUSHED OUT PROGRESSIVELY BY OPENING OUTLETS AND FLOWING WATER UNTIL IT RUNS CLEAR. AFTER PIPE CLEANING IS COMPLETED, THE STRAINERS SHALL BE REMOVED, CLEANED, AND REPLACED. THEN THE ENTIRE POTABLE WATER SYSTEM SHALL BE DISINFECTED IN ACCORDANCE WITH THE AUTHORITY HAVING JURISDICTION.

C. THE SANITARY WASTE SYSTEM SHALL BE FLUSHED OUT PROGRESSIVELY WITH FLOWING WATER UNTIL IT RUNS CLEAR.

D. THE ENTIRE SANITARY WASTE SYSTEM AND STORM DRAINAGE SYSTEM SHALL BE PRESSURE TESTED IN ACCORDANCE WITH APPLICABLE CODE REQUIREMENTS AND MANUFACTURERS RECOMMENDATIONS.

PART III - MANUFACTURERS

3.01 PRODUCTS - PIPING SYSTEMS, ETC

A. HYDRANTS, CARRIERS, DRAINS, AND SHOCK ABSORBERS: ZURN. ACCEPTABLE ALTERNATES: JAY R. SMITH, JONES STEPHENS CORP, WATTS, OR JOSAM.

B. ALTERNATES TO ZURN FIXTURES: ONLY AS SHOWN ON PLANS. APPROVED JAY R. SMITH, WATTS, MODEL NUMBERS LISTED ON FIXTURE SCHEDULE.

C. ALL FIXTURES NOTED ABOVE AND IN THE PLUMBING FIXTURE SCHEDULE SHALL BE PROVIDED THROUGH A NATIONAL ACCOUNT PROGRAM WITH HJC.

3.02 PRODUCTS - RESTROOM FIXTURES PORCELAIN & VALVES

A. PREFERRED FIXTURES: TOTO. NO EXCEPTION.

B. ALTERNATE FIXTURES: ONLY AS SHOWN ON PLANS.

C. FITTINGS: AS SPECIFIED ON THE PLANS. NO SUBSTITUTIONS ALLOWED.

D. FLUSH VALVES AND LAVATORY FAUCETS: TOTO MANUFACTURING. NO SUBSTITUTIONS ALLOWED.

E. REFERRED TOILET SEATS: TOTO. ALTERNATE TOILET SEATS: CHURCH, BEMIS, AND BENEKE.

F. FLOOR SINKS: ZURN WITH ALUMINUM SEDIMENT BUCKETS. NO SUBSTITUTIONS ALLOWED.

PLUMBING GENERAL NOTES

DRAIN WASTE AND VENT NOTES

1. COORDINATE INSTALLATION OF SANITARY PIPING WITH FOOTINGS IN THE FIELD. SLEEVE PENETRATIONS IN FOOTINGS WITH PVC.
2. COORDINATE VENT TERMINAL LOCATIONS WITH FRESH AIR HOODS ON ROOFTOP EQUIPMENT SO AS TO MAINTAIN MINIMUM 15'-0" CLEARANCE.
3. ALL UNDERGROUND VENT PIPING TO BE 2" DIAMETER MIN U.N.O.
4. ALL BELOW SLAB SANITARY AND GREASE WASTE PIPING SHALL BE 3" DIAMETER U.N.O.

WATER DISTRIBUTION NOTES

1. FOR WATER HEATER INSTALLATION POSITION VALVES AND TRIM SUCH THAT VISIBLE OBSERVATION OF VALVES AND TRIM IS UNOBSTRUCTED AND SUCH THAT ACCESS FOR OPERATION OR REPAIR IS POSSIBLE WITHOUT USE OF STEP LADDERS OR ANY NEED TO DISASSEMBLE ANY COMPONENTS.
2. ALL WATER PIPING INSTALLED WITHIN EXTERIOR WALLS SHALL BE LOCATED ON THE INTERIOR SIDE OF THE INSULATION.
3. SEE KITCHEN DRAWINGS FOR KITCHEN EQUIPMENT WATER PIPING ROUGH-IN LOCATIONS AND ELEVATIONS.
4. WATER HEATER PIPING IS SHOWN FOR BRADFORD WHITE. ADJUST PIPING AS NEEDED TO ACCOMODATE OTHER CONNECTION POINTS WHEN ALTERNATE MODELS ARE PROVIDED.
5. ALL OVERHEAD WATER PIPING SHALL BE LOCATED ABOVE THE CEILING. RUN WATER PIPING THROUGH JOIST WEBBING. COORDINATE ALL DROP LOCATIONS WITH OTHER TRADES.

BEVERAGE CONDUIT NOTES

1. ROUTE BEVERAGE SYSTEM PIPING OVERHEAD FROM THE BEVERAGE RACK TO DRINK TOWERS IN FOUR (4)-6" DIA SCH 40 PVC DWV CONDUITS. ALL CONDUIT SHALL BE HELD TIGHT TO STRUCTURE AND SUPPORTED WITH THREADED ROD AND CLEVIS HANGERS AT INTERVALS SHOWN IN SPECIFICATIONS FOR HORIZONTALA OVERHEAD PIPING. COORDINATE ROUTING WITH THE GENERAL CONTRACTOR TO AVOID MECHANICAL AND ELECTRICAL SYSTEMS. SEE 1/P-101 AND 1/P-104 FOR BELOW-SLAB BEVERAGE CONDUIT.
2. COORDINATE ROUTING OF ALL CONDUITS WITH HVAC DUCT IN KITCHEN. SEE SHEET M-101 FOR LOCATION OF AC UNITS AND DUCT ROUTING.
3. TURN THE 6" DIA CONDUIT DOWN THROUGH THE CEILING AT THE BEVERAGE RACK AND PROVIDE CHROMED ESCUTCHEONS AT CEILING PENETRATIONS. TERMINATE OPPOSITE END ABOVE CEILING WHERE SHOWN ON PLANS.
4. AT 4" DIA CONDUIT DROP IN WALL, PROVIDE 1/8TH BEND FITTING WITH SHORT PIPE STUB AT BASE OF DROP. CUT STUB AND FITTING FLUSH WITH FINISHED WALL.
5. FOR BEVERAGE CONDUIT DROPS AT WALLS WITH SHEATHING EXTENDED ABOVE THE CEILING, PROVIDE APPROPRIATE FITTING AT UPPER END OF CONDUIT DROP TO EXTEND CONDUIT THROUGH SHEATHING.
6. INSTALL CONTINUOUS CONDUIT FROM CO2 FILL-BOX LOCATION TO BULK CO2 TANK AS SHOWN ON PLANS AND DETAILS. COORDINATE 4" CONDUIT WALL STUB INSTALLATION CLOSELY WITH GENERAL CONTRACTOR AND BRICK MASON. PRIOR TO COVERING UP OF CONDUIT, VERIFY WITH GENERAL CONTRACTOR THE FULL LENGTH OF FILL/VENT TUBING MAY BE INSTALLED AND SUBSEQUENTLY REMOVED FROM CONDUIT. SEE PLAN ON 1/P-104 AND DETAIL 9/P-501.

ABBREVIATIONS

EC	ELECTRICAL CONTRACTOR
GC	GENERAL CONTRACTOR
MC	MECHANICAL CONTRACTOR
PC	PLUMBING CONTRACTOR
O.C.	ON CENTER
FS	FLOOR SINK
FD	FLOOR DRAIN
FV	FLUSH VALVE
FCO	FLOOR CLEAN OUT
WC	WATER CLOSET
KEQ	KITCHEN EQUIPMENT

Chick-fil-A
5200 Buffington Road
Atlanta, Georgia
30349-2998

Kurzynske & Associates
2705 Lebanon Pike - Suite One
Nashville, Tennessee 37214
Telephone: (615) 255-5203

ALABAMA REGISTERED PROFESSIONAL ENGINEER MARK T. KURZYNSKE NO. 20174
06/21/24

CHICK-FIL-A
VALLEY, AL

3215 20th Avenue
VALLEY, AL 36854

FSR#05772

BUILDING TYPE / SIZE: BTS LS BP
RELEASE: 23.09
PRINTED FOR
CONSTRUCTION

REVISION SCHEDULE

NO.	DATE	DESCRIPTION

CONSULTANT PROJECT #	24035.CC.S
DATE	03/20/2024
DRAWN BY	CH

Information contained on this drawing and in all digital files produced for above named project may not be reproduced in any manner without express written or verbal consent from authorized project representatives.

SHEET
PLUMBING SPECIFICATIONS, GENERAL NOTES & LEGENDS

SHEET NUMBER
P-001

6/21/2024 10:21:22 AM Autodesk Docs://AL_05772_Valley_2024.2_BTS/05772_Valley_PLB.rvt
40-LS-05772-P-001-PLUMBING SPECIFICATIONS, GENERAL NOTES & LEGENDS

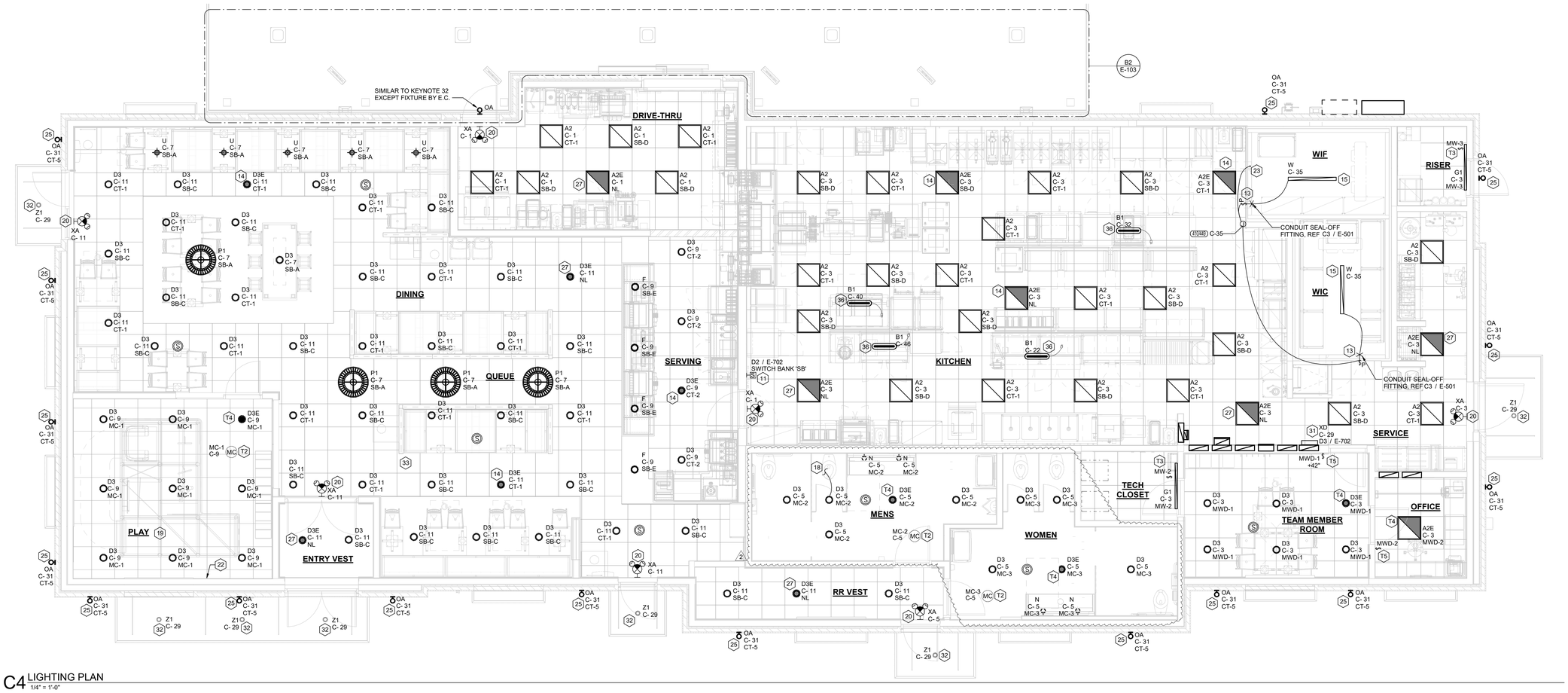

C4 LIGHTING PLAN
1/4" = 1'-0"

ELECTRICAL KEYNOTES

11 APPROXIMATE LOCATION OF SWITCH BANK 'SB'. SEE DETAIL ON THE LIGHTING PLAN FOR MORE INFORMATION.

13 FOR CONTROL OF LIGHTING FIXTURE IN WALK-IN COOLER AND FREEZER. SWITCH FURNISHED WITH EQUIPMENT, INSTALLED BY ELECTRICAL CONTRACTOR.

14 CONNECT FIXTURE SO THAT BATTERY PACK IS NOT SWITCHED WITH LIGHTS, BUT ALL LAMPS ARE SWITCHED.

15 FOR CONNECTION TO LIGHTING FIXTURE IN THE WALK-IN COOLER AND FREEZER WHICH IS FURNISHED WITH EQUIPMENT. CONTRACTOR SHALL ROUGH-IN AND CONNECT ALL FIXTURES AS REQUIRED BY THE EQUIPMENT MANUFACTURER.

18 TO THE TOILET EXHAUST FAN ON ROOF. REFER TO THE ELECTRICAL ROOF PLAN.

19 INSTALL ALL JUNCTION BOXES IN THE PLAY AREA SO THEY WILL BE READILY ACCESSIBLE AFTER THE PLAYGROUND EQUIPMENT IS INSTALLED.

20 THIS FIXTURE SHALL NOT BE SWITCHED. CONNECT TO CIRCUIT AHEAD OF ALL SWITCHING AND CONTROLS.

22 SEE THE ELECTRICAL ROOF PLAN FOR LOCATION OF TYPE 'OC' ROOF MOUNTED FLAG POLE LIGHT. FIXTURE TO BE CONNECTED TO CIRCUIT C-29 THRU THE CFA-T500 CONTROL PANEL CONTACTOR #9 (AHEAD OF THE INVERTER, NOT THRU THE INVERTER.)

23 TO WALK-IN FREEZER DOOR FRAME HEATER AND AIR RELIEF ASSEMBLY (PRESSURE REDUCTION VALVE - PRV), THRU SEAL-OFF FITTING. VERIFY ROUGH-IN AND FINAL CONNECTION WITH EQUIPMENT.

25 ROUTE THROUGH CONTROL PANEL CFA-T500 AND CONTROLLED BY OCCUPIED SWITCH AND PHOTOCELL.

27 CONNECT LIGHTING FIXTURE SO THAT LAMP BALLAST OR DRIVER AND EMERGENCY BATTERY PACK ARE NOT SWITCHED. 'NL' ADJACENT TO FIXTURE INDICATES THAT FIXTURE SHALL BE ON 24 HOURS.

31 TYPE 'XD' INVERTER CABINET TO BE WALL MOUNTED AT THE CEILING AND CONNECTED TO CIRCUIT C-29 THRU THE CFA-T500'S CONTACTOR #9 (DUSK TO DAWN CONTROL). CONNECT WITH BOTH A CONTROLLED (VIA THE CONTACTOR FOR LIGHTS ON AT DUSK AND OFF AT DAWN) LEG AND AN UNSWITCHED LEG FOR THE BATTERY IN THE INVERTER. WHEN POWER IS DISRUPTED ON THE UNSWITCHED LEG, THEN THE INVERTER'S BATTERY WILL ENERGIZE THE LIGHTS CONNECTED TO THE INVERTER NO MATTER THE TIME OF DAY. PROVIDE CONNECTIONS IN ACCORDANCE WITH THE MANUFACTURER'S RECOMMENDATIONS.

32 CANOPY LIGHTS PROVIDED BY THE CANOPY SUPPLIER INTEGRAL WITH THE CANOPY. ELECTRICAL CONTRACTOR SHALL PROVIDE ROUGH-IN CONDUIT CHASE AT CL OF AWNING AND AT 10'-0" AFF (VERIFY) AND CONNECT THE 120V CIRCUIT TO THE 'XD' INVERTER UNIT. COORDINATE LOCATIONS OF LIGHTS AND ROUGH-IN REQUIREMENTS WITH THE CANOPY SUPPLIER. LIGHTS WILL COME ON AT DUSK, TURN OFF AT DAWN, AND BE ENERGIZED WHENEVER THERE IS A POWER OUTAGE.

33 REFER TO ARCHITECTURAL REFLECTED CEILING PLAN FOR LOCATIONS OF PENDANTS, DOWNLIGHTS, ACCENTS LIGHTS, AND OTHER CEILING MOUNTED LIGHT FIXTURES.

36 PROVIDE A TYPE B1 SHELF MOUNTED TASK LIGHT FIXTURE. MOUNT LIGHT TO THE UNDERSIDE OF THE WIRE SHELVING. PROVIDE A CORD FROM THE FIXTURE(S) TO A SWITCH IN AN FS BOX MOUNTED TO THE SHELF. FROM FS BOX PROVIDE AN SO CORD WITH PLUG AND CONNECT TO THE GEN RECEPTACLE (WALL OR DROP CORD). SEE ENLARGED POWER PLAN FOR FURTHER INFORMATION.

112 CEILING LIGHT FIXTURE PROVIDED BY THE CANOPY SUPPLIER AND INSTALLED BY ELECTRICAL CONTRACTOR.

ELECTRICAL KEYNOTES

113 AIR CIRCULATING FAN (WITH INTEGRAL ON-OFF SWITCH) PROVIDED AND INSTALLED BY MECHANICAL CONTRACTOR, PROVIDE A DUPLEX RECEPTACLE OUTLET (WITH IN-USE WP COVER PLATE) AT THE TOP OF THE COLUMN FLUSH MOUNTED IN THE CUT-OUT FOR THE FAN'S PLUG AND CORD CONNECTION.

114 INFRARED HEATER WITH INTEGRAL ON-OFF SWITCH PROVIDED AND INSTALLED BY MECHANICAL CONTRACTOR.

115 PROVIDE ONE DUPLEX GFCI (WITH IN-USE WP COVER PLATE) AND TWO 120V SINGLE-POLE SWITCHES (EACH WITH HUBBELL #RW51550 WP COVER PLATE) AND ONE DUPLEX SINGLE-POLE SWITCH (WITH HUBBELL #RW51470 WP COVER PLATE) MOUNTED IN THE COLUMN IN FLUSH MOUNTED METAL SINGLE-GANG BOXES FOR LOCAL ON-OFF CONTROL OF THE FANS, HEATERS, AND CANOPY LIGHTS. SEE WIRING SCHEMATIC FOR FURTHER INFORMATION. ALL SURFACE (OR VISIBLE) ITEMS AND COVERPLATES TO BE FIELD PAINTED MATTE BLACK.

116 ALL CONDUIT AND BOXES SHALL BE CONCEALED FROM NORMAL VIEW; IN WALLS OR ABOVE THE CANOPY (ON THE ROOF). MC CABLE (GALVANIZED STEEL WITH PVC JACKET) MAY BE USED INSIDE THE WALL FOR THE DEVICES, BUT MUST CONVERT TO IMC ABOVE THE CANOPY ROOF. (PROVIDE A NEMA 3R JUNCTION BOX ON THE ROOF SIDE OF THE CANOPY TO TRANSITION FROM MC CABLES IN WALL TO IMC CONDUIT ON THE ROOF.) ALL EXPOSED BOXES AND FITTINGS TO BE CAST-METAL NEMA 3R. REFER TO THE MECHANICAL SHEETS FOR CONDUIT MOUNTING DETAILS ON THE ROOF.

T2 CEILING MOUNTED LINE VOLTAGE OCCUPANCY SENSOR. ROUTE LOCAL AREA LIGHTS THROUGH SENSOR.

T3 LINE VOLTAGE OCCUPANCY SENSOR SWITCH. ROUTE LOCAL AREA LIGHTS THROUGH SENSOR.

T4 EMERGENCY BATTERY PACK SHALL NOT BE SWITCHED OR ROUTED THROUGH ANY CONTROLS, BUT LIGHT SHALL BE CONTROLED VIA OCCUPANY OR DAYLIGHT CONTROLS.

T5 LINE VOLTAGE 0-10V DIMMING OCCUPANCY SENSOR SWITCH. ROUTE LOCAL AREA LIGHTS THROUGH SENSOR.

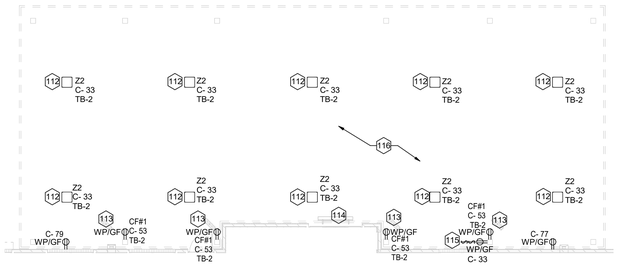

B2 CANOPY PLAN
1/8" = 1'-0"

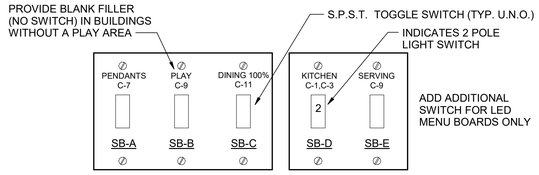

NOTE: LOCATE JUNCTION BOXES IN CEILING SPACE ABOVE THE LOCATION OF THE SWITCHBANK FOR SPLICING OF LINE, LOAD, AND SWITCHED CONDUCTORS. PROVIDE GANGED BACKBOX FOR SWITCHES AS REQUIRED AND LABEL ALL CONDUCTORS SO AS TO INDICATE THEIR USE (LINE, LOAD, SWITCH), THE LOAD SERVED, AND THE CIRCUIT NUMBER.

B1 SWITCH BANK "SB" DETAIL
NO SCALE

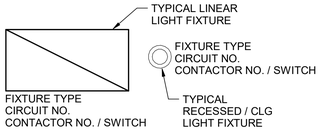

A3 LIGHT FIXTURE NOMECLATURE
NO SCALE

LIGHTING FIXTURE (LUMINAIRE) SCHEDULE - CHICK-FIL-A P14 EDITION

NOTE: NOT ALL FIXTURE TYPES ARE USED IN ALL OF THE P14 BUILDINGS. CONFIRM WITH THE LIGHTING VENDOR FOR ANY UPDATES TO THE CURRENT LIGHTING MANUFACTURER AND CATALOG NUMBER.

MARK	MANUFACTURER	CATALOG NUMBER	NO. LAMPS/TYPE	WATTS	VOLTS	MOUNTING	REMARKS
A2	COOPER/METALUX	22FP4240C	INTEGRAL WITH FIXTURE	39 VA	120 V	RECESSED	2X2 LED FLAT PANEL
A2E	COOPER/METALUX	22FP4240C	INTEGRAL WITH FIXTURE	39 VA	120 V	RECESSED	2X2 EMERGENCY LED FLAT PANEL
B1	COOPER/METALUX	2VT3-LD5-4-G-120V-L840-CD1-SSL-U	INTEGRAL WITH FIXTURE	32 VA	120 V	SURFACE	MOUNT LIGHT TO BTM OF OVERHEAD WIRE SHELVING WITH CORD & PLUG
D3	COOPER/HALO	HC620D010-HM60525830-61ND0C	INTEGRAL WITH FIXTURE	21 VA	120 V	RECESSED	LED DOWNLIGHT WITH CLEAR REFLECTOR & TRIM RATED 2000 LUMENS, 3000K COLOR TEMP
D3E	COOPER/HALO	HC620D010-HM60525830-61NDCIEM	INTEGRAL WITH FIXTURE	21 VA	120 V	RECESSED	SAME AS 'D3' EXCEPT WITH EMERGENCY BATTERY PACK/INTEGRAL TEST SWITCH
F	COOPER/HALO	SLDSL6069S1EMWR	INTEGRAL WITH FIXTURE	9 VA	120 V	SURFACE	RETROFIT ULTRA-LOW 6" SURFACE LED DOWNLIGHT, SET COLOR TEMP TO 3000K
G1	COOPER/METALUX	4SLSTP4040DD-UNV	INTEGRAL WITH FIXTURE	44 VA	120 V	SURFACE	4760 LUMEN 4 FOOT LENSED LED STRIPLIGHT, MTD ABOVE DOOR FRAME OR CEILING
N	GEORGE KOVACS	P5040-66A-L	Z08 SMD LED/Y53 LED MODULE	12 VA	120 V	WALL	LAVATORY WALL SCONCE CL ON LAVATORY
OA	PROGRESS LIGHTING	P5675-31/30K WITH P860038 TOP COVER LENS	INTEGRAL WITH FIXTURE	34 VA	120 V	WALL	5" DIAMETER, 14" HEIGHT, WET LOCATION, UP/DOWN CYLINDER
OC	HUBBELL	FLL-42L-95-4K-7-N-U-K-DB (SEE NOTE 4)	INTEGRAL WITH FIXTURE	97 VA	120 V	PIPE	FLOODLIGHT MTD ON ROOF ON 2" PIPE SUPPORT (BY OTHERS) AND AIMED AT FLAG AFTER DARK
OD	COOPER/LUMARK	LUMINAIRE: PRV-A60D-UNV-**-SA-BZ	INTEGRAL WITH FIXTURE	153 VA			SEE SHEET E-102 FOR SITE LIGHTING SPECIFICATIONS
OK	HUBBELL	LNC-5LU-3K-3-1	INTEGRAL WITH FIXTURE	13 VA	120 V	WALL	LED WALLPACK W/ CENTERLINE OF FIXTURE AT 8'-0" ABV 0'-0" (FINISH FLOOR LINE)
P1	MEYDA	142776	2-LED11A19/827/D	22 VA	120 V	PENDANT	31" DIA PEACH BASKET PENDANT WITH BTM AT 8'-0" AFF
U	BESA LIGHTING	BES00298-060	FURNISHED	9 VA	120 V	PENDANT	RED FRIT GLASS, BRONZE CABLE & CANOPY, 8'-0" AFF
W	HOWARD LIGHTING	EVSL44040MVS	INTEGRAL WITH FIXTURE	40 VA	120 V	SURFACE	50" VAPOR-TIGHT LED FIXTURE PROVIDED BY THERMO-KOOL
XA	COOPER/SURE-LITES	APCH7R	INTEGRAL WITH FIXTURE	4 VA	120 V	WALL	EXIT SIGN WITH BATTERY PACK AND TWO INTEGRAL ADJUSTABLE LAMPHEADS
XD	MULE LIGHTING	SPS-220/250-120/277	NONE	250 VA	120 V	WALL	INVERTER UNIT FOR EXTERIOR EGRESS LTG; ON AT DUSK, OFF AT DAWN, ON DURING PWR OUTAGE
Z1	COOPER/HALO	SLD405930WH	INTEGRAL WITH FIXTURE	12 VA	120 V	RECESSED	LED DOWNLIGHT PROVIDED BY CANOPY SUPPLIER INSTALLED BY CANOPY SUPPLIER, CONNECTION BY ELECTRICAL CONTRACTOR
Z2	LSI	CRUS-SC-LED-LW30-UE-WHT	INTEGRAL WITH FIXTURE	74 VA	120 V	RECESSED	CANOPY LIGHT PROVIDED BY CANOPY SUPPLIER AND INSTALLED BY ELECTRICAL CONTRACTOR
* MC	SENSOR SWITCH	CMR-PDT-9	-		120V	CEILING	CEILING MOUNTED LINE VOLTAGE OCCUPANCY SENSOR WITH DUEL TECHNOLOGY, LOCATED IN RESTROOM.
* MCL	SENSOR SWITCH	CM-PDT-9	-		24V	CEILING	CEILING MOUNTED LOW VOLTAGE OCCUPANCY SENSOR FOR LOCAL RECEPTACLE CONTROLS.
* MW	SENSOR SWITCH	WSX-WH	-		120V	WALL	WALL SWITCH OCCUPANCY SENSOR, AUTOMATIC ON AND OFF.
* MWD	SENSOR SWITCH	WSX-PDT-D-SA-WH	-		120V	WALL	MANUAL ON / AUTOMATIC OFF OCCUPANCY SWITCH, 0-10V DIMMING
* PC	SENSOR SWITCH	RMR-PC-ADC	-		120V	WALL	RECESSED AUTOMATIC PHOTOCELL FOR DAYLIGHT CONTROLS, FIELD COORDINATE MTD LOCATION.
* PP	SENSOR SWITCH	PP20	-		120V	JUNCTION BOX	POWER PACK FOR OCCUPANCY SENSOR 'MCL' AND RECEPTACLE CONTROL, AUTO ON / AUTO OFF.

NOTES:
1. LUMINAIRES UTILIZING DOUBLE-ENDED LAMPS AND CONTAIN BALLASTS THAT CAN BE SERVICED IN PLACE SHALL HAVE A DISCONNECTING MEANS EITHER INTERNAL OF EXTERNAL TO EACH LUMINAIRE PER NEC 410.130(G).
2. THE LIGHTING FIXTURE PACKAGE IS AVAILABLE THROUGH A NATIONAL ACCOUNT PROGRAM. REFER TO THE ELECTRICAL SPECIFICATIONS SHEET, SECTION C16500 FOR VENDOR INFORMATION.
3. THE ASTERISK (*) BESIDE THE FIXTURE MARK IN THE ABOVE SCHEDULE INDICATES THE FIXTURE IS A NON-PROTOTYPICAL LIGHT FIXTURE PER THE CFA NATIONAL P13 PROTOTYPE.
4. IF TYPE OC IS GROUND MOUNTED IN LIEU OF ROOF MOUNTED, PROVIDE EITHER THE FLL-VISOR-DB (VISOR) OR THE FLL-LOUVER-BL (LOUVER) FOR GLARE CONTROL.

Chick-fil-A
5200 Buffington Road
Atlanta, Georgia
30349-2998

Kurzynske & Associates
2705 Lebanon Pike - Suite One
Nashville, Tennessee 37214
Telephone: (615) 255-5203

ALABAMA REGISTERED PROFESSIONAL ENGINEER NO. 20714 MARK T. KURZYNSKE
06/21/24

CHICK-FIL-A
VALLEY, AL
3215 20TH AVENUE
VALLEY, AL 36854

FSR#05772

BUILDING TYPE / SIZE: BTS LS BP
RELEASE: 23.09
PRINTED FOR
CONSTRUCTION

REVISION SCHEDULE

NO.	DATE	DESCRIPTION
2	06/21/2024	Construction Set

CONSULTANT PROJECT # 24035.CC.S
DATE 03/27/2024
DRAWN BY ES

Information contained on this drawing and in all digital files produced for above named project may not be reproduced in any manner without express written or verbal consent from authorized project representatives.

SHEET
LIGHTING PLAN

SHEET NUMBER
E-103

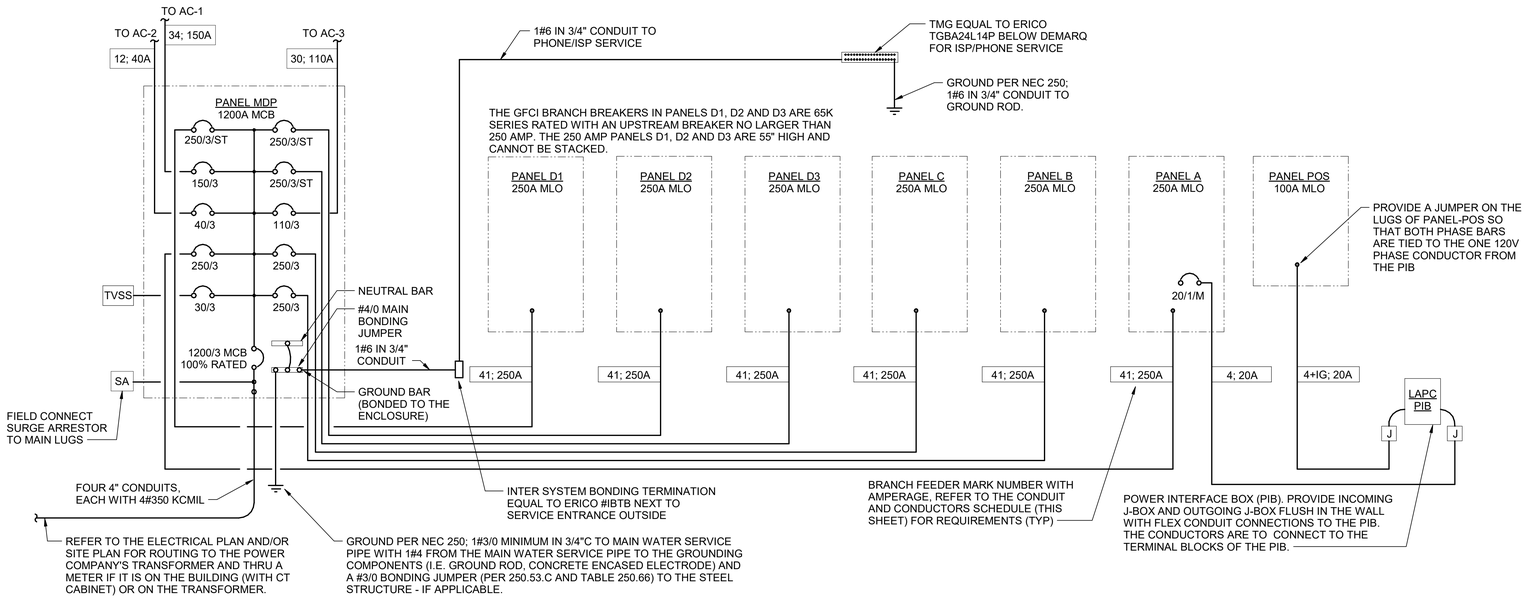

C2 SINGLE LINE DIAGRAM
NO SCALE

ARC ENERGY REDUCTION

PER NEC 240.87 ARC ENERGY REDUCTION HAS BEEN PROVIDED THROUGH THE USE OF THE ENERGY-REDUCTION MAINTENANCE SWITCH (ERMS) WITHIN THE MDP. THE CONTRACTOR MUST OBTAIN ON-SITE PERFORMANCE TESTING THROUGH A CERTIFIED THIRD PARTY IN ACCORDANCE WITH 240.87(C). A WRITTEN RECORD OF THIS TESTING SHALL BE MADE AND AVAILABLE TO THE AUTHORITY HAVING JURISDICTION. ONCE APPROVED BY THE AHJ, THE "ERMS OPERATING PROCEDURE" SHALL BE LAMINATED AND AFFIXED TO THE INTERIOR SIDE OF THE MDP DOOR.

SINGLE-LINE DIAGRAM NOTES

1. VERIFY SERVICE LOCATIONS AND CONFORM TO THE REQUIREMENTS OF THE POWER COMPANY AND/OR DEVELOPER. POWER COMPANY AND/OR DEVELOPER SHALL BE CONTACTED PRIOR TO BEGINNING CONSTRUCTION TO ARRANGE AND VERIFY FOR THE INSTALLATION OF THE POWER COMPANY SERVICE, METER, AND OTHER ITEMS.
2. GROUND ALL EQUIPMENT AND SERVICES IN ACCORDANCE WITH ARTICLE 250 OF THE NATIONAL ELECTRICAL CODE, LOCAL APPLICABLE CODES, AND ALSO AS INDICATED ON DRAWINGS.
3. MAKE NECESSARY INSPECTIONS OF EXISTING SITE AND SERVICE LOCATIONS AS REQUIRED FOR THIS WORK AND MAKE ALLOWANCE FOR EXISTING CONDITIONS BEFORE SUBMITTING BID. VERIFY WORK REQUIRED WITH POWER COMPANY AND TELEPHONE COMPANY.
4. CUT AND PATCH THE CONSTRUCTION WORK AS REQUIRED FOR PROPER INSTALLATION OF THE ELECTRICAL WORK. ALL PATCHING SHALL MATCH THE SURROUNDING WORK TO THE SATISFACTION OF THE ARCHITECT. ALL CONDUIT SHALL BE INSTALLED CONCEALED UNLESS SPECIFICALLY APPROVED BY THE ARCHITECT. COORDINATE SAW CUTTING WITH LANDLORD'S OR OWNER'S REPRESENTATIVE.
5. WIRE AND CABLE:
   A. CONDUCTORS SHALL BE COPPER, #12 AWG, MINIMUM UNLESS SPECIFICALLY NOTED OTHERWISE.
   B. CONDUCTOR #10 AWG AND SMALLER SHALL BE SOLID AND #8 AWG AND LARGER SHALL BE STRANDED. INSULATION SHALL BE 600 VOLT, THHN/THWN.
6. PROVIDE ENGRAVED LAMINATED PHENOLIC BLOCK-ON-WHITE (UNLESS NOTED OTHERWISE) NAMEPLATES SECURED TO EQUIPMENT WITH ADHESIVE AND SCREWS FOR PANELBOARDS, RELAY CABINETS, TRANSFORMERS, DISTRIBUTION BOARDS, AND MAIN PANELBOARD - IDENTIFYING EQUIPMENT DESIGNATION (CORRESPONDING WITH DESIGNATION USED ON DRAWINGS) AND EQUIPMENT VOLTAGE. LETTERING SHALL BE 1/4" HIGH. PROVIDE LABELS FOR CIRCUIT BREAKERS, FUSIBLE SWITCHES AND STARTERS IN PANELBOARDS AND DISTRIBUTION BOARDS FOR EACH DEVICE IDENTIFYING EQUIPMENT CONTROLLED. LETTERING SHALL BE 1/8" HIGH.
7. ALL DEVICES SHALL HAVE AN INTERRUPTING CAPACITY NOT LESS THAN THE POWER COMPANY AVAILABLE FAULT CURRENT, OR AS INDICATED ON THE DRAWINGS.
8. 120/208 VOLT BRANCH CIRCUIT PANELBOARD BREAKERS SHALL HAVE A MINIMUM U.L. SERIES RATING OF 65 KAIC WITH UP-STREAM FEEDER BREAKERS AS NOTED.
9. AVAILABLE SPACE FOR MAIN PANELBOARD IS LIMITED. PANELBOARD MUST FIT IN ALLOCATED SPACE. COORDINATE WITH CONSTRUCTION AS REQUIRED.
10. ALL WIRING SHALL BE IN CONDUIT, E.M.T OR RIGID. FLEXIBLE CONDUIT MAY ONLY BE USED FOR FINAL CONNECTIONS AND WITH GREEN EQUIPMENT GROUNDING CONDUCTORS.

SWITCHGEAR AND CONTROL EQUIPMENT NOTES

1. PURCHASE PANELBOARDS, SURGE ARRESTOR, AND TVSS FROM AN APPROVED NATIONAL ACCOUNTS VENDOR (SEE ELECTRICAL SPECIFICATIONS, SECTION C16440, PANELBOARDS) PROVIDING SQUARE-D EQUIPMENT. NO SUBSTITUTIONS ALLOWED.
2. PURCHASE CONTROL PANEL 'CFA-T500' FROM SUNCOAST ENVIRONMENTAL, INC. (NO SUBSTITUTIONS ALLOWED). ALL EQUIPMENT IN THE CONTROL PANEL SHALL BE INSTALLED, WIRED AND CONNECTED AT THE FACTORY, INCLUDING AUTOMATIC LIGHTING CONTROL SYSTEM, LIGHTING RELAYS, HVAC STARTERS, POWER SUPPLIES, MISCELLANEOUS RELAYS AND CONTROLS, AND THERMOSTATS.
3. CONTRACTOR SHALL PROVIDE PANEL FEEDERS A, B, C, D1, D2, D3, AND POS, BRANCH CIRCUIT CONDUIT AND WIRE, AND INSTALL ALL EQUIPMENT AS REQUIRED.
4. ALL BREAKERS AND PANELS SHALL BE SQUARE-D.
5. TVSS AND SURGE ARRESTOR UNITS SHALL BE MOUNTED DIRECTLY ADJACENT TO THE SIDE OF THE MAIN DISTRIBUTION PANEL IN NEMA 3R ENCLOSURES. CLOSE NIPPLE THE UNITS TO THE SIDE OF THE PANEL. PROVIDE CONNECTION OF TVSS UNIT TO BREAKER IN PANEL. CONNECT SURGE ARRESTOR TO MAIN INCOMING LUGS OF THE PANEL. CONNECT USING MINIMUM LENGTH OF WIRE WITHOUT SHARP BENDS IN THE WIRE AND SHALL NOT BE LENGTHENED FROM WIRE LENGTH PROVIDED WITH THE TVSS OR SURGE SUPPRESSOR DEVICE.

B1 CONDUIT AND CONDUCTORS SCHEDULE

Mark No.	OCP Device (Amp/Poles)	Conductors Total Amps 60d C	75d C	Conductors Phase & Neutral Qty	Size	Type	Min Eq Grd Qty/Set	Size	Raceway Size (Nominal Inches) No. Sets	Phase, Neutral & Equip Grd EMT	IMC	RIGID	PVC	With IG EMT	IMC	PVC
1	20/1	20	-	2	12	THHN	1	12	One	0.75	0.75	0.75	0.75	0.75	0.75	0.75
2	20/2	20	-	3	12	THHN	1	12	One	0.75	0.75	0.75	0.75	0.75	0.75	0.75
3	20/3	20	-	4	12	THHN	1	12	One	0.75	0.75	0.75	0.75	0.75	0.75	0.75
4	25/1	30	-	2	10	THHN	1	10	One	0.75	0.75	0.75	0.75	0.75	0.75	0.75
5	25/2	30	-	3	10	THHN	1	10	One	0.75	0.75	0.75	0.75	0.75	0.75	0.75
6	25/3	30	-	4	10	THHN	1	10	One	0.75	0.75	0.75	0.75	0.75	0.75	0.75
7	30/1	30	-	2	10	THHN	1	10	One	0.75	0.75	0.75	0.75	0.75	0.75	0.75
8	30/2	30	-	3	10	THHN	1	10	One	0.75	0.75	0.75	0.75	0.75	0.75	0.75
9	30/3	30	-	4	10	THHN	1	10	One	0.75	0.75	0.75	0.75	0.75	0.75	0.75
10	40/1	40	-	2	8	THHN	1	10	One	0.75	0.75	0.75	0.75	0.75	0.75	0.75
11	40/2	40	-	3	8	THHN	1	10	One	0.75	0.75	0.75	0.75	0.75	0.75	0.75
12	40/3	40	-	4	8	THHN	1	10	One	0.75	0.75	0.75	0.75	0.75	0.75	1.00
13	45/3	55	-	4	6	THHN	1	10	One	1.00	1.00	1.00	1.00	1.00	1.00	1.00
14	50/1	55	-	2	6	THHN	1	10	One	0.75	0.75	0.75	0.75	0.75	0.75	1.00
15	50/2	55	-	3	6	THHN	1	10	One	0.75	0.75	0.75	0.75	1.00	1.00	1.00
16	50/3	55	-	4	6	THHN	1	10	One	1.00	1.00	1.00	1.00	1.00	1.00	1.00
17	60/1	70	-	2	4	THW	1	8	One	1.00	1.00	1.00	1.00	1.25	1.00	1.25
18	60/2	70	-	3	4	THW	1	8	One	1.25	1.00	1.25	1.25	1.25	1.25	1.25
19	60/3	70	-	4	4	THW	1	8	One	1.25	1.25	1.25	1.25	1.25	1.25	1.25
20	70/1	70	-	2	4	THW	1	8	One	1.00	1.00	1.00	1.00	1.25	1.00	1.25
21	70/2	70	-	3	4	THW	1	8	One	1.25	1.00	1.25	1.25	1.25	1.25	1.25
22	70/3	70	-	4	4	THW	1	8	One	1.25	1.25	1.25	1.25	1.25	1.25	1.25
23	80/2	85	-	3	3	THW	1	8	One	1.25	1.25	1.25	1.25	1.25	1.25	1.25
24	80/3	85	-	4	3	THW	1	8	One	1.25	1.25	1.25	1.25	1.50	1.25	1.50
25	90/2	95	-	3	2	THW	1	8	One	1.25	1.25	1.25	1.25	1.50	1.25	1.50
26	90/3	95	-	4	2	THW	1	8	One	1.50	1.25	1.50	1.50	1.50	1.50	1.50
27	100/2	110	-	3	1	THW	1	6	One	1.50	1.50	1.50	1.50	2.00	2.00	2.00
28	100/3	110	-	4	1	THW	1	6	One	2.00	2.00	2.00	2.00	2.00	2.00	2.00
29	110/2	-	150	3	1/0	THW	1	6	One	1.25	1.25	1.25	1.25	1.50	1.25	1.50
30	110/3	-	150	4	1/0	THW	1	6	One	1.50	1.25	1.50	1.50	1.50	1.50	1.50
31	125/2	-	150	3	1/0	THW	1	6	One	1.50	1.50	1.50	1.50	2.00	2.00	2.00
32	125/3	-	150	4	1/0	THW	1	6	One	2.00	2.00	2.00	2.00	2.00	2.00	2.00
33	150/2	-	150	3	1/0	THW	1	6	One	2.00	1.50	2.00	2.00	2.00	2.00	2.00
34	150/3	-	150	4	1/0	THW	1	6	One	2.00	2.00	2.00	2.00	2.00	2.00	2.00
35	175/2	-	175	3	2/0	THW	1	6	One	2.00	2.00	2.00	2.00	2.00	2.00	2.00
36	175/3	-	175	4	2/0	THW	1	6	One	2.00	2.00	2.00	2.00	2.50	2.50	2.50
37	200/2	-	200	3	3/0	THW	1	6	One	2.00	2.00	2.00	2.00	2.50	2.50	2.50
38	200/3	-	200	4	3/0	THW	1	6	One	2.50	2.50	2.50	2.50	2.50	2.50	2.50
39	225/2	-	230	3	4/0	THW	1	4	One	2.50	2.00	2.50	2.50	2.50	2.50	2.50
40	225/3	-	230	4	4/0	THW	1	4	One	2.50	2.50	2.50	2.50	2.50	3.00	3.00
41	250/3	-	255	4	250	THW	1	4	One	2.50	3.00	3.00	3.00	3.00	3.00	3.00
42A	300/3	-	285	4	300	THW	1	4	One	3.00	3.00	3.00	3.00	3.00	3.00	3.00
42B	300/3	-	310	4	350	THW	1	4	One	3.00	3.00	3.00	3.00	3.00	3.00	3.00
43A	350/3	-	335	4	400	THW	1	4	One	3.00	3.50	3.50	3.50	3.50	3.50	3.50
43B	350/3	-	380	4	500	THW	1	4	One	3.50	3.50	3.50	3.50	3.50	3.50	3.50
44A	400/3	-	380	4	500	THW	1	3	One	3.50	3.50	3.50	3.50	3.50	3.50	3.50
44B	400/3	-	400	4	3/0	THW	1	3	Two	2.50	2.50	2.50	2.50	2.50	2.50	2.50
45A	600/3	-	570	4	300	THW	1	1	Two	3.00	3.00	3.00	3.00	3.00	3.00	3.00
45B	600/3	-	620	4	350	THW	1	1	Two	3.00	3.00	3.00	3.00	3.00	3.00	3.50
46A	800/3	-	760	4	500	THW	1	1/0	Two	3.50	3.50	3.50	3.50	3.50	3.50	3.50
46B	800/3	-	820	4	600	THW	1	1/0	Two	4.00	4.00	4.00	4.00	4.00	4.00	4.00
47	1000/3	-	1005	4	400	THW	1	2/0	Three	3.50	3.50	3.50	3.50	3.50	3.50	3.50
48	1200/3	-	1240	4	350	THW	1	3/0	Four	3.50	3.50	3.50	3.50	3.50	3.50	4.00
49	1600/3	-	1675	4	400	THW	1	4/0	Five	4.00	4.00	4.00	4.00	4.00	4.00	4.00

Notes:
Conductors are rated at 600 volt or below and are to be copper.

NEC Table 310.15(B)(16) - formerly Table 310.16 - is used for the basis of the conductor ampacities, which is not more than three current carrying conductors in a raceway at an ambient temperature of 30 deg C with 60 deg C rated conductors and connectors per 110.14-C-1 for up to 100 amp rated and up to #1 AWG conductors for equipment terminations and 75 deg C rated conductors and termination connectors for larger than 100 amp or above #1 AWG conductors.

NEC Tables 4, 5, and Appendix C is used for the basis of the conduit sizes. Table C1 for EMT, Table C4 for IMC, Table C8 for Rigid, and Table C10 for PVC (Sch 40).

All Branch Feeders and Branch Circuits shall include a green Equipment Grounding Conductor.

Omit Grounding conductor on Service Entrance Feeders.

Omit Neutral conductor on all Delta primary transformer feeders or single-phase 2 pole loads and 3 phase loads not requiring a neutral.

The above conductors are not calculated for Voltage Drop. Any circuits that exceed 100 feet shall be calculated by the Installer to have less than a three percent voltage drop on feeders and five percent on branch circuits per the NEC.

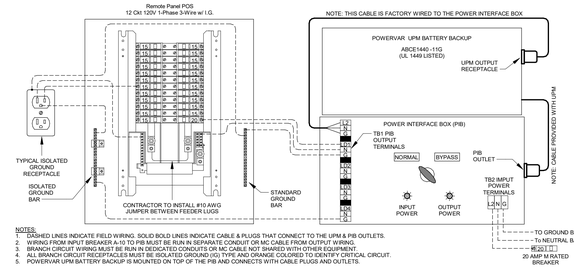

NOTES:
1. DASHED LINES INDICATE FIELD WIRING. SOLID BOLD LINES INDICATE CABLE & PLUGS THAT CONNECT TO THE UPM & PIB OUTLETS.
2. WIRING FROM INPUT BREAKER A-10 TO PIB MUST BE RUN IN SEPARATE CONDUIT OR MC CABLE FROM OUTPUT WIRING.
3. BRANCH CIRCUIT WIRING MUST BE RUN IN DEDICATED CONDUITS OR MC CABLE NOT SHARED WITH OTHER EQUIPMENT.
4. ALL BRANCH CIRCUIT RECEPTACLES MUST BE ISOLATED GROUND (IG) TYPE AND ORANGE COLORED TO IDENTIFY CRITICAL CIRCUIT.
5. POWERVAR UPM BATTERY BACKUP IS MOUNTED ON TOP OF THE PIB AND CONNECTS WITH CABLE PLUGS AND OUTLETS.

A1 POS AND LAPC/PIB WIRING DIAGRAM
NO SCALE

Chick-fil-A
5200 Buffington Road
Atlanta, Georgia
30349-2998

Kurzynske & Associates
2705 Lebanon Pike - Suite One
Nashville, Tennessee 37214
Telephone: (615) 255-5203

ALABAMA REGISTERED PROFESSIONAL ENGINEER MARK T. KURZYNSKE NO. 30714 06/21/24

CHICK-FIL-A
VALLEY, AL

3215 20TH AVENUE
VALLEY, AL 36854

FSR#05772

BUILDING TYPE / SIZE: BTS LS BP
RELEASE: 23.09
PRINTED FOR
CONSTRUCTION

REVISION SCHEDULE
NO. DATE DESCRIPTION

CONSULTANT PROJECT # 24035.CC.S
DATE 03/27/2024
DRAWN BY ES

Information contained on this drawing and in all digital files produced for above named project may not be reproduced in any manner without express written or verbal consent from authorized project representatives.

SHEET
SINGLE LINE DIAGRAM

SHEET NUMBER
E-701

NOTE OF SPECIAL IMPORTANCE:

BELOW-SLAB BEVERAGE CONDUIT SHALL BE 6" DIAMETER SCHED 40 DWV SOLID WALL, NO FOAM CORE ALLOWED. USE LONG RADIUS ELBOWS ON ALL BEVERAGE CONDUIT. PLEASE NOTE BEVERAGE CONDUIT ROUGH-IN LOCATIONS ARE MEASURED TO THE FRACTION OF AN INCH. CARE MUST BE TAKEN WHEN INSTALLING 6" DIAMETER CONDUIT LOCATED WITHIN A 2X8 WALL. THE MARGIN FOR ERROR IS ONLY 1/16TH INCH.

NOTES ABOUT (0,0) BENCHMARK ORIGIN

1. THE (X=0, Y=0) BENCHMARK ORIGIN IS LOCATED AT THE OUTSIDE FACE-OF-FRAMING FOR THE EXTERIOR WALL AT THE CORNER WHERE SHOWN.
2. IT IS EXTREMELY IMPORTANT FOR THE PLUMBING INSTALLER TO BECOME COMPLETELY FAMILIAR WITH THE FACE-OF-FRAMING POSITION AND ITS RELATION TO THE FLOOR SLAB CONSTRUCTION PRIOR TO BEGINNING THE UNDERSLAB PLUMBING ROUGH-IN.
3. PLUMBING CONTRACTOR SHALL REVIEW STRUCTURAL DETAILS FOR PRECISE LOCATION OF FACE-OF-FRAMING WITH RESPECT TO THE SLAB INSTALLATION PRIOR TO LOCATING SLAB ROUGH-INS.

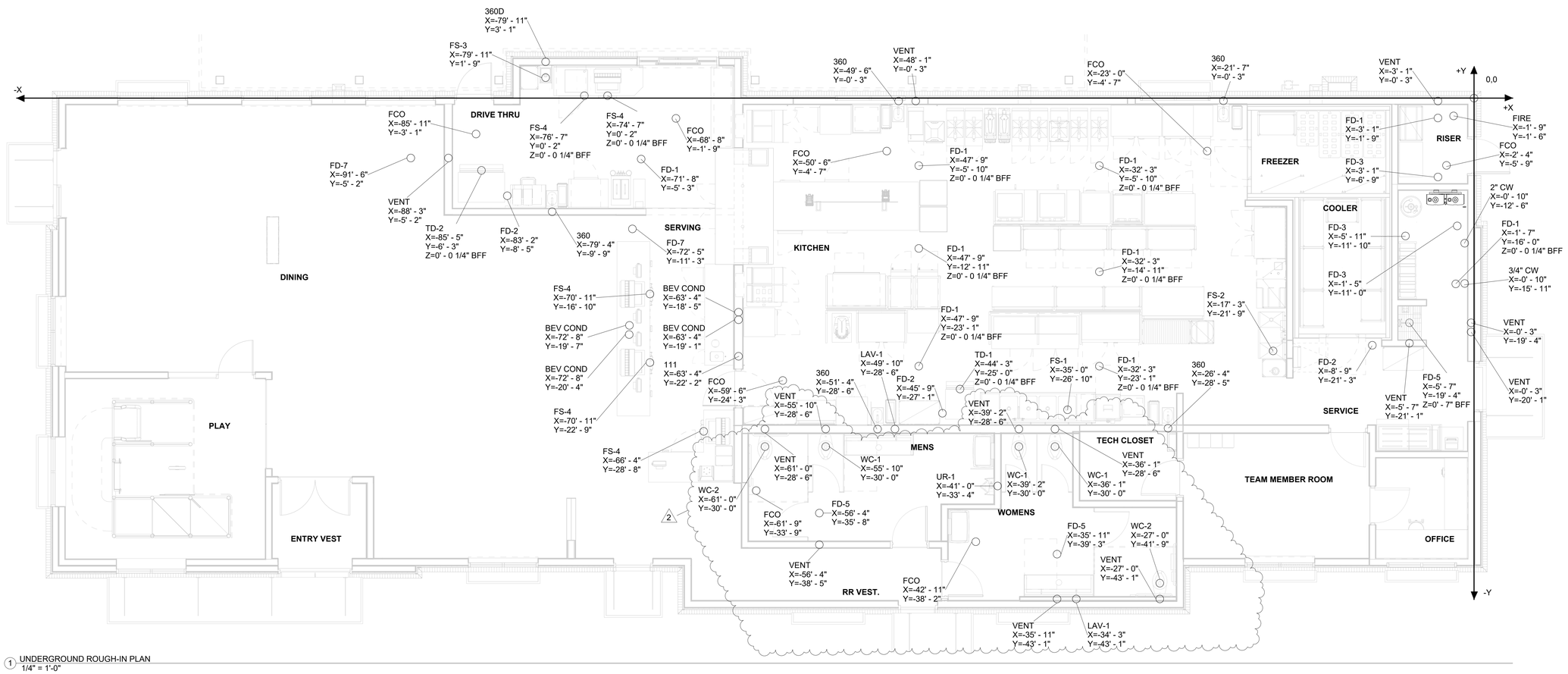

1 UNDERGROUND ROUGH-IN PLAN
1/4" = 1'-0"

Chick-fil-A
5200 Buffington Road
Atlanta, Georgia
30349-2998

Kurzynske & Associates
2705 Lebanon Pike - Suite One
Nashville, Tennessee 37214
Telephone: (615) 255-5203

ALABAMA REGISTERED PROFESSIONAL ENGINEER MARK T. KURZYNSKE NO. 20714
06/21/24

CHICK-FIL-A
VALLEY, AL

3215 20th Avenue
VALLEY, AL 36854

FSR#05772

BUILDING TYPE / SIZE: BTS LS BP
RELEASE: 23.09
PRINTED FOR
CONSTRUCTION

REVISION SCHEDULE

NO.	DATE	DESCRIPTION
2	06/21/2024	Construction Set

CONSULTANT PROJECT #	24035.CC.S
DATE	03/20/2024
DRAWN BY	CH

Information contained on this drawing and in all digital files produced for above named project may not be reproduced in any manner without express written or verbal consent from authorized project representatives.

SHEET
UNDERGROUND ROUGH-IN PLAN

SHEET NUMBER
P-102

6/21/2024 10:21:29 AM Autodesk Docs://AL_05772_Valley_2024-2_BTS/05772_Valley_PLB.rvt
40-LS-05772-P-102-UNDERGROUND ROUGH-IN PLAN

KEY NOTES

38 PROVIDE SCHEDULE 40 (BLACK OR GALVANIZED) STEEL PIPING BACK TO FUTURE DARPRO OIL TANK. PIPING TO BE ROUTED TO ALLOW AS MUCH FALL AS POSSIBLE TO THE TANK.

57 3/4" AND 2" SCHEDULE 40 STEEL PIPES DOWN THROUGH CEILING. CAP PIPES 2" BELOW THE CEILING FOR FUTURE CONNECTION. PROVIDE CHROMED ESCUTCHEONS AT CEILING PENETRATIONS.

69 STUB OUT TO BE MOUNTED 30" AFF. SEE DETAIL SHEET FOR MORE INFORMATION.

70 EXTEND 2" STEEL PIPE BEYOND FACE OF BRICK. CAP FOR FUTURE USE. GC TO TRIM STUB-OUT ACCORDINGLY.

75 6" BEVERAGE CONDUIT BELOW SLAB.

76 TURN 6" BEVERAGE CONDUIT UP THRU SLAB. EXTEND 8" ABOVE SLAB SURFACE AND CAP WATERTIGHT. SEE 1/P-221 FOR LOCATION.

77 6" BEVERAGE CONDUIT UP FROM BELOW SLAB. COORDINATE WITH DEVICES, CONDUITS, AND FIXTURES FROM OTHER DISCIPLINES DURING PRE-CONSTRUCTION MEETING.

78 6" BEVERAGE CONDUIT DOWN IN WALL. START ABOVE CEILING AND TURN OUT THRU WALL TOWARDS DRINK TOWER WITH BOTTOM EDGE OF WALL PENETRATION 0'-8" ABOVE FINISHED FLOOR. SEE BEVERAGE CONDUIT NOTE #4 AND #5.

79 ROUTE 6" BEVERAGE CONDUIT IN THIS AREA ABOVE RECTANGULAR DUCT. COORDINATE CLOSELY WITH HVAC INSTALLER PRIOR TO INSTALLATION.

81 6" BEVERAGE CONDUITS. SEE BEVERAGE CONDUIT NOTE #3.

82 3" DIA SCHED 40 PVC SWEEP TURNED DOWN WITH DROP THRU ACT ABOVE BULK CO2 TANK. SEE ARCHITECTURAL REFLECTED CEILING PLAN FOR PRECISE LOCATION. SEE DETAIL #5 THIS SHEET.

83 6" BEVERAGE CONDUIT TURNED DOWN THRU ACT. TYPICAL. SEE DETAIL SHEET FOR MORE INFORMATION.

84 PLAN STORAGE TUBE ABOVE DOOR. MOUNT 6" DIA X 30" LONG PVC WITH CLEANOUT PLUGS AT EACH END. SECURE TO WALL ABOVE EMERGENCY LIGHT WITH STRUT AND CLAMPS.

85 6" BEVERAGE CONDUIT TIGHT TO STRUCTURE. EXTEND WITHIN WALL. EXTEND UP THRU WALL FRAMING JUST ABOVE CEILING, TYPICAL. COORDINATE WITH DEVICES, CONDUITS, AND FIXTURES FROM OTHER DISCIPLINES DURING PRE-CONSTRUCTION MEETING.

86 TRANSITION FROM 6" TO 4" BEVERAGE CONDUIT AS CLOSE TO WALL AS POSSIBLE.

87 4" DIA STUB OUT AT REMOTE FILL-BOX. SEE DETAIL 9/P-501.

96 CONDUIT FOR FUTURE BEVERAGE TOWER.

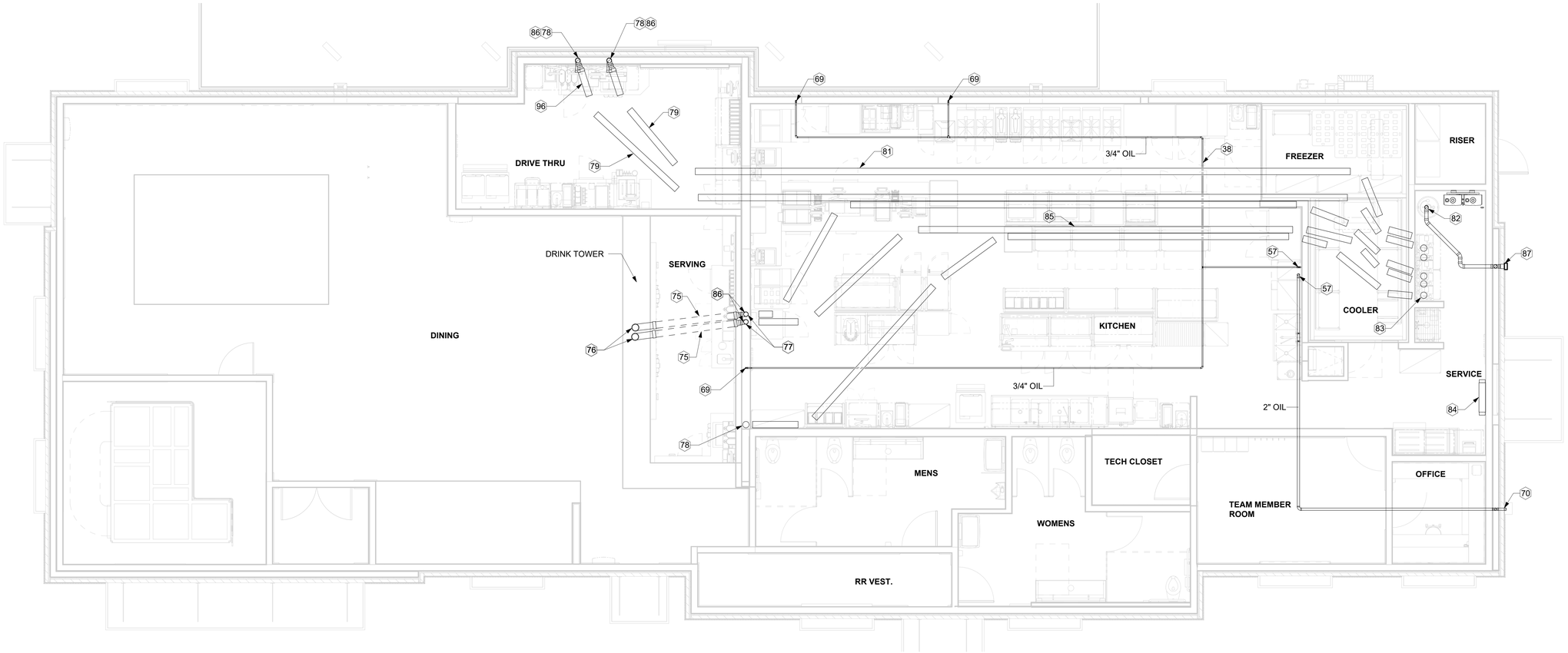

1 BEVERAGE CONDUIT AND OIL PIPING PLAN
1/4" = 1'-0"

Chick-fil-A
5200 Buffington Road
Atlanta, Georgia
30349-2998

Kurzynske & Associates
2705 Lebanon Pike - Suite One
Nashville, Tennessee 37214
Telephone: (615) 255-5203

ALABAMA REGISTERED PROFESSIONAL ENGINEER MARK T. KURZYNSKE NO. 20714
06/21/24

CHICK-FIL-A
VALLEY, AL

3215 20th Avenue
VALLEY, AL 36854

FSR#05772

BUILDING TYPE / SIZE: BTS LS BP
RELEASE: 23.09
PRINTED FOR
CONSTRUCTION

REVISION SCHEDULE

NO.	DATE	DESCRIPTION

CONSULTANT PROJECT # 24035.CC.S
DATE 03/20/2024
DRAWN BY CH

Information contained on this drawing and in all digital files produced for above named project may not be reproduced in any manner without express written or verbal consent from authorized project representatives.

SHEET
BEVERAGE CONDUIT AND OIL PIPING PLAN

SHEET NUMBER
P-104

6/21/2024 10:21:35 AM Autodesk Docs://AL_05772_Valley_2024.2_BTS/05772_Valley_PLB.rvt
40-LS-05772-P-104-BEVERAGE CONDUIT AND OIL PIPING PLAN

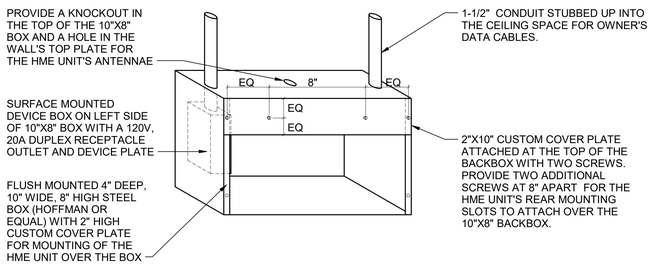

E3 HME UNIT POWER & DATA BOX DETAIL
N.T.S.

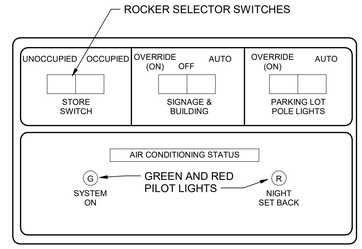

NOTE:
THIS UNIT IS MOUNTED IN THE DOOR OF THE CFA-T500 CONTROL CABINET AND IS INCLUDED WITH THE GEAR ORDER FROM SUNCOAST ENVIRONMENTAL INC.

D2 OPEN-CLOSED CONTROL SWITCH
N.T.S.

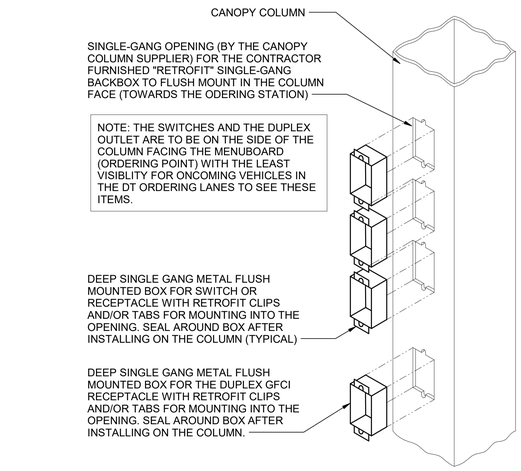

D1 CANOPY COLUMN ISOMETRIC
N.T.S.

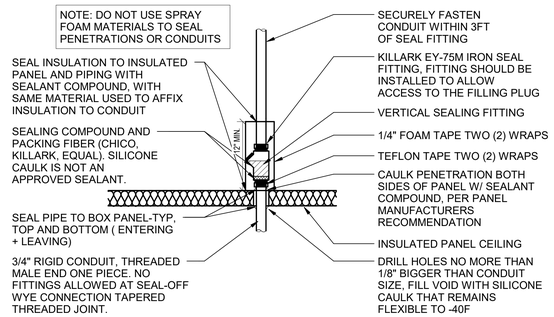

C3 WIC/WIF SEAL-OFF DETAIL
N.T.S.

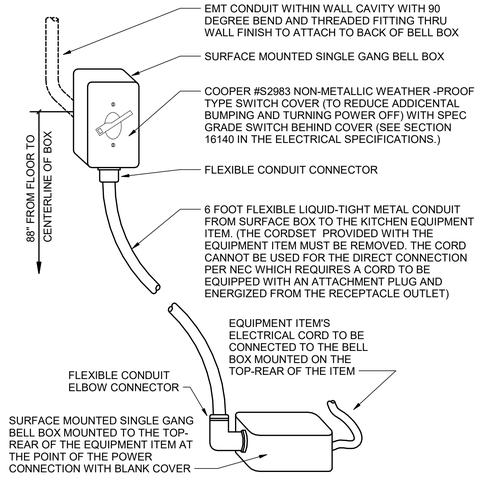

C2 DIRECT CONNECTION -WALL LOCATION
N.T.S.

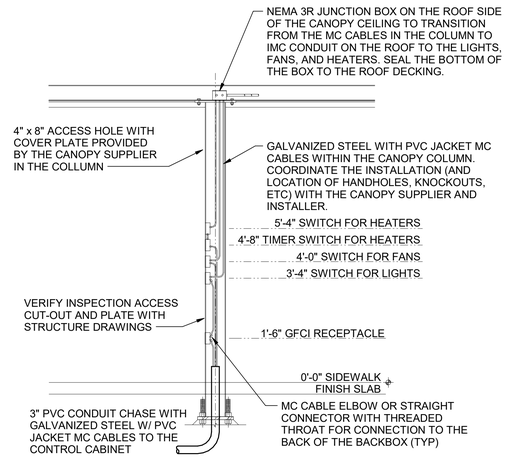

B1 MLOP ORDER CANOPY COLUMN SECTION
N.T.S.

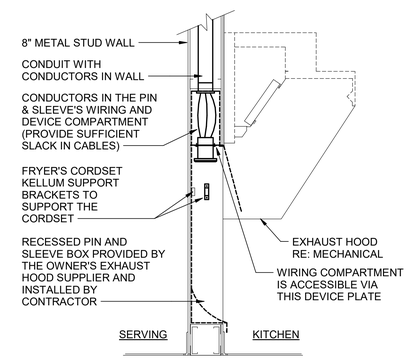

B3 PIN & SLEEVE BOX DETAIL
N.T.S.

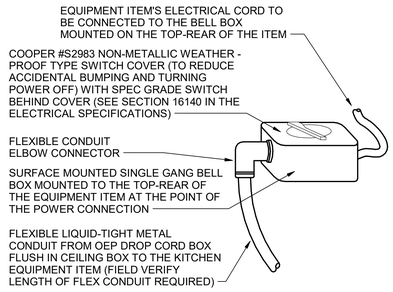

B2 DIRECT CONNECTION - ISLAND LOCATION
N.T.S.

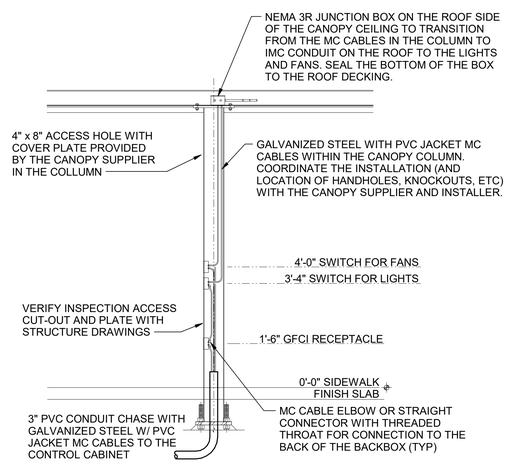

A1 MEAL DELIVERY CANOPY COLUMN SECTION
N.T.S.

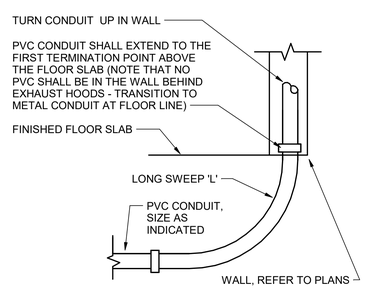

A2 INTERIOR PVC CONDUIT DETAIL
N.T.S.

Chick-fil-A
5200 Buffington Road
Atlanta, Georgia
30349-2998

Kurzynske & Associates
2705 Lebanon Pike - Suite One
Nashville, Tennessee 37214
Telephone: (615) 255-5203

ALABAMA REGISTERED PROFESSIONAL ENGINEER MARK T. KURZYNSKE
06/21/24

CHICK-FIL-A
VALLEY, AL
3215 20TH AVENUE
VALLEY, AL 36854

FSR#05772

BUILDING TYPE / SIZE: BTS LS BP
RELEASE: 23.09
PRINTED FOR
CONSTRUCTION

REVISION SCHEDULE

NO.	DATE	DESCRIPTION

CONSULTANT PROJECT #	24035.CC.S
DATE	03/27/2024
DRAWN BY	ES

Information contained on this drawing and in all digital files produced for above named project may not be reproduced in any manner without express written or verbal consent from authorized project representatives.

SHEET
DETAILS

SHEET NUMBER
E-501

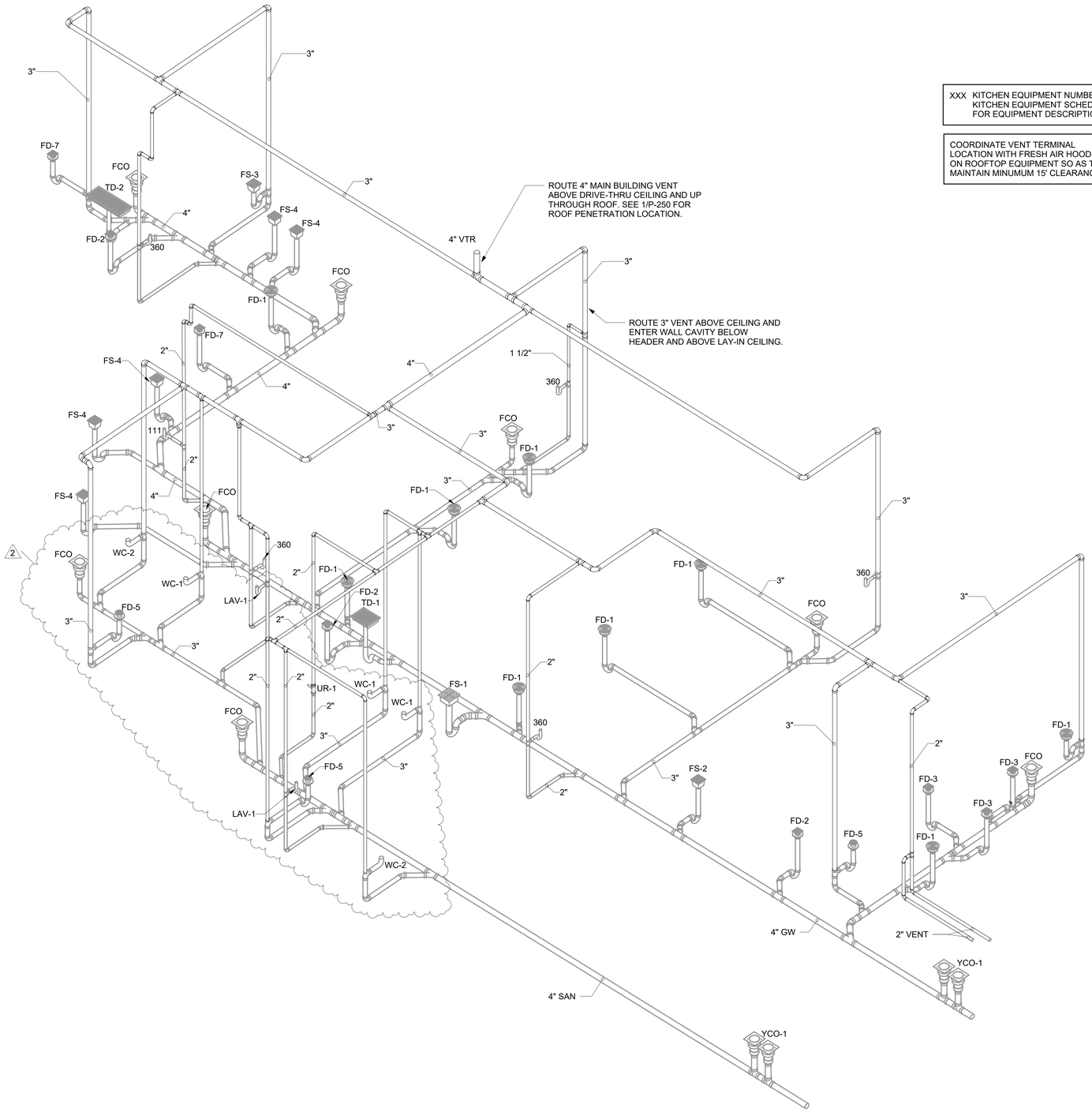

XXX KITCHEN EQUIPMENT NUMBER. SEE KITCHEN EQUIPMENT SCHEDULE ON P-601 FOR EQUIPMENT DESCRIPTIONS.

COORDINATE VENT TERMINAL LOCATION WITH FRESH AIR HOODS ON ROOFTOP EQUIPMENT SO AS TO MAINTAIN MINUMUM 15' CLEARANCE.

1 DRAIN, WASTE AND VENT ISOMETRIC

Chick-fil-A
5200 Buffington Road
Atlanta, Georgia
30349-2998

Kurzynske & Associates
2705 Lebanon Pike - Suite One
Nashville, Tennessee 37214
Telephone: (615) 255-5203

ALABAMA REGISTERED PROFESSIONAL ENGINEER MARK T. KURZYNSKE No. 20114
06/21/24

CHICK-FIL-A
VALLEY, AL

3215 20th Avenue
VALLEY, AL 36854

FSR#05772

BUILDING TYPE / SIZE: BTS LS BP
RELEASE: 23.09
PRINTED FOR
CONSTRUCTION

REVISION SCHEDULE

NO.	DATE	DESCRIPTION
2	06/21/2024	Construction Set

CONSULTANT PROJECT # 24035.CC.S
DATE 03/20/2024
DRAWN BY CH

Information contained on this drawing and in all digital files produced for above named project may not be reproduced in any manner without express written or verbal consent from authorized project representatives.

SHEET
DRAIN, WASTE AND VENT ISOMETRIC

SHEET NUMBER
P-901

6/21/2024 10:21:41 AM Autodesk Docs://AL_05772_Valley_2024.2_BTS/05772_Valley_PLB.rvt
40-LS-05772-P-901-DRAIN, WASTE AND VENT ISOMETRIC

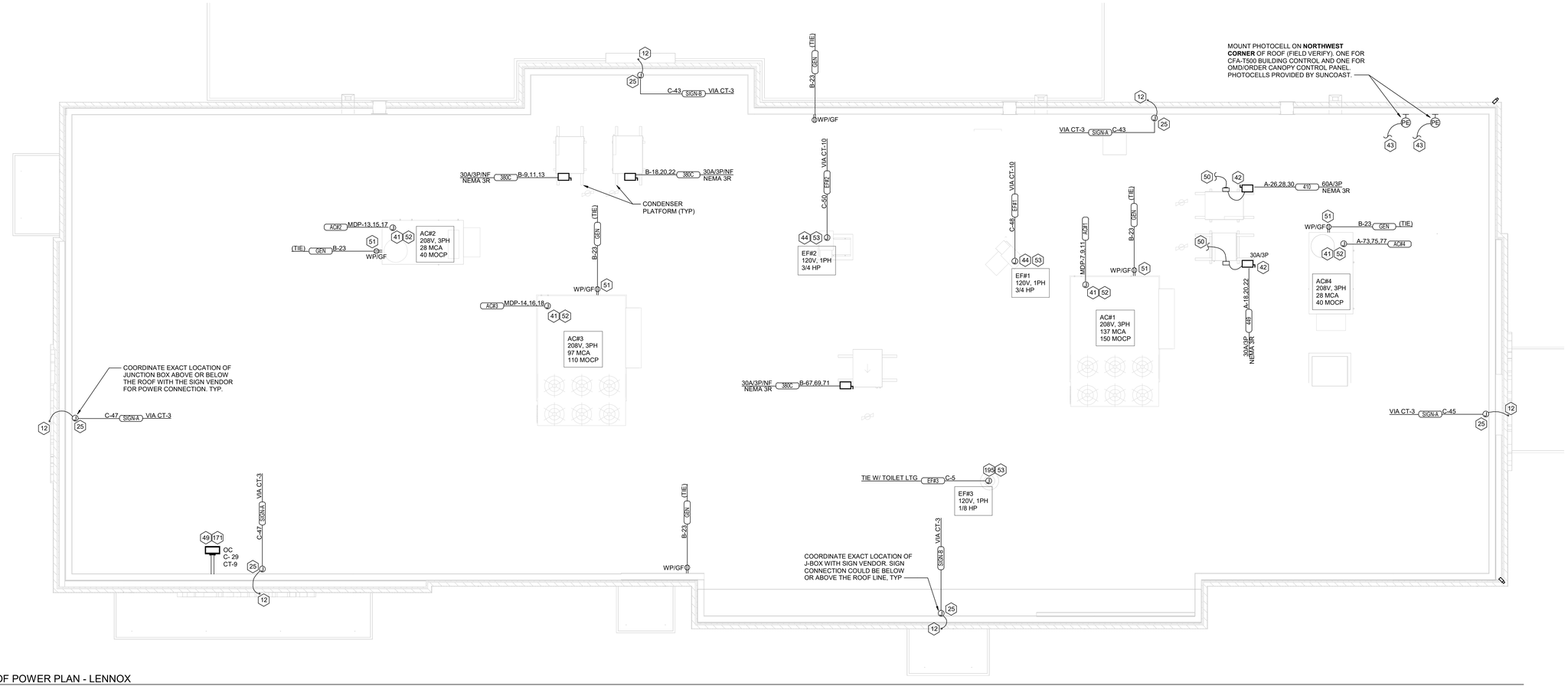

C1 ROOF POWER PLAN - LENNOX
1/4" = 1'-0"

ELECTRICAL KEYNOTES

12 FOR SIGNAGE BY OTHERS; CONNECT AS REQUIRED. GROUND ALL LOCATIONS IN ACCORDANCE WITH NEC AND MANUFACTURER'S REQUIREMENTS. SIGN IS FURNISHED WITH AN INTEGRAL PRE-WIRED DISCONNECTING MEANS.

25 ROUTE THROUGH CONTROL PANEL CFA-T500 AND CONTROLLED BY OCCUPIED SWITCH AND PHOTOCELL.

41 ROUTE ELECTRICAL CONDUITS TO UNIT CONNECTIONS THROUGH WEATHERPROOF RACEWAY FURNISHED WITH UNIT. COORDINATE WITH MECHANICAL CONTRACTOR FOR EXACT LOCATIONS.

42 MOUNT WEATHER-PROOF FUSED DISCONNECT SWITCHES FOR WIC AND WIF CONDENSERS ON UNISTRUT WITH CONDUIT DOWN INTO CEILING SPACE BELOW THRU ROOF PENETRATION DEVICE (NOT THRU ROOF), SEE THE ARCHITECTURAL ROOF PENETRATION DETAIL(S) FOR FURTHER INFORMATION. PROVIDE FUSE SIZE PER MANUFACTURER REQUIREMENTS.

43 CONNECT ONE PHOTOCELL ON ROOF TO THE CFA-T500 CONTROL PANEL TERMINALS AND ONE PHOTOCELL ON ROOF TO THE ORDER/OMD CANOPY CONTROL PANEL AS DIRECTED BY SUNCOAST ENVIRONMENTAL INC WIRING DIAGRAMS. PHOTOCELLS ON THE ROOF FURNISHED WITH CONTROL PANELS ORDER (SUNCOAST) AND INSTALLED BY CONTRACTOR.

44 COORDINATE EXACT LOCATION OF CONDUIT AND DISCONNECT AT EXHAUST FAN. CONDUIT SHALL BE INSTALLED THROUGH ROOF ON OUTSIDE OF FAN CURB. CONDUIT SHALL BE LOCATED AT FAN HINGE SUCH THAT THE FAN HOOD CAN BE FULLY HINGED OPEN AND NOT TOUCH THE CONDUIT. PROVIDE 14" DIAMETER LOOP IN THE FLEXIBLE CONDUIT BETWEEN THE ROOF AND THE FAN ELECTRICAL CONNECTION.

49 MOUNT TYPE 'OC' LIGHTING FIXTURE, WITH INTEGRAL SLIPFITTER, ON PIPE. PIPE WILL BE PROVIDED BY OTHER TRADES. AIM LIGHTING FIXTURE AT NIGHT FOR BEST ILLUMINATION OF FLAG.

50 CONNECT POWER FROM EACH CONDENSING UNIT'S COMPRESSOR CONTACTOR TO THE EVAPORATOR COIL UNIT'S JUNCTION BOX BELOW. REFER TO ENLARGED KITCHEN POWER PLAN FOR LOCATION.

51 CONTRACTOR SHALL PROVIDE POWER TO CONVIENCE RECEPTACLE SUPPLIED WITH THE AC UNIT.

52 A/C UNIT DISCONNECT IS FURNISHED WITH A/C UNIT AND SHALL BE CONNECTED BY THE CONTRACTOR.

53 EXHAUST FAN IS FURNISHED WITH A PREWIRED DISCONNECT.

171 FLAG POLE LIGHT FIXTURE TYPE 'OC'. REFER TO LIGHTING FIXTURE SCHEDULE FOR MORE INFORMATION. SEE ARCHITECTURAL DRAWINGS FOR MOUNTING DETAIL.

195 COORDINATE EXACT LOCATION OF CONDUIT AND DISCONNECT AT EXHAUST FAN. CONDUIT SHALL BE ROUTED WITH DUCTWORK WITHIN FAN ROOF CURB AND TO THE FAN WIREWAY. PROVIDE SEALTIGHT FITTINGS AS THE CONDUIT ENTERS AND LEAVES THE DUCTWORK. CIRCUIT WITH RESTROOM LIGHTING AHEAD OF OCCUPANCY CONTROLS. REFER TO THE LIGHTING PLAN FOR CONTINUATION.

NOTE: REFER TO MECHANICAL DRAWINGS FOR ROOFTOP PACKAGED AC UNIT SCHEDULE. ALL UNITS ARE FURNISHED WITH FACTORY INSTALLED DISCONNECT SWITCH. REFER TO SAME SCHEDULE FOR INDICATION OF UNITS FURNISHED WITH FACTORY RECEPTACLE FOR COMPLIANCE WITH NEC.

Chick-fil-A
5200 Buffington Road
Atlanta, Georgia
30349-2998

Kurzynske & Associates
2705 Lebanon Pike - Suite One
Nashville, Tennessee 37214
Telephone: (615) 255-5203

ALABAMA REGISTERED PROFESSIONAL ENGINEER MARK T. KURZYNSKE NO. 32014
06/21/24

CHICK-FIL-A VALLEY, AL

3215 20TH AVENUE
VALLEY, AL 36854

FSR#05772

BUILDING TYPE / SIZE: BTS LS BP
RELEASE: 23.09
PRINTED FOR
CONSTRUCTION

REVISION SCHEDULE

NO.	DATE	DESCRIPTION

CONSULTANT PROJECT # 24035.CC.S
DATE 03/27/2024
DRAWN BY ES

Information contained on this drawing and in all digital files produced for above named project may not be reproduced in any manner without express written or verbal consent from authorized project representatives.

SHEET
ROOF POWER PLAN

SHEET NUMBER
E-105

ELECTRICAL LEGEND

SYMBOL	DESCRIPTION	MTG HT AFF TO CL
	LIGHTING FIXTURES	
	SURFACE MOUNTED LIGHTING FIXTURE	
	RECESSED LED TROFFER LIGHTING FIXTURE	
	SURFACE MOUNTED LED LIGHTING FIXTURE	
	RECESSED LED LIGHTING FIXTURE	
	WALL MOUNTED LIGHTING FIXTURE, SEE LIGHTING FIXTURE SCHEDULE	AS NOTED
	WALL MOUNTED EXIT SIGN, SHADE INDICATES FACES, PROVIDE CHEVRON DIRECTIONALS WHEN NEEDED	6" FROM CEILING TO TOP
	CEILING MTD EXIT SIGN, SHADING INDICATES FACES. PROVIDE W/ CHEVRON DIRECTIONALS WHEN NEEDED	
	COMBO EXIT WITH TWO LAMPHEADS	
	WALL MTD EMERGENCY BATTERY PACK LIGHTING FIXTURE	AS NOTED
	CEILING MTD EMERGENCY BATTERY PACK LIGHTING FIXTURE	
	FLUORESCENT STRIP LIGHTING FIXTURE	
	WALLWASHER TYPE RECESSED DOWNLIGHT, AIM LIGHT TOWARD WALL	
	RECESSED LIGHTING FIXTURE W/ EMERGENCY BATTERY PACK	
	PENDANT LIGHTING FIXTURE	AS NOTED
	LIGHTING TRACK WITH TRACK HEADS	
	WIRING DEVICES	
	120 VOLT DUPLEX RECEPTACLE, 20 AMPS U.O.N.	14" UON
	120 VOLT QUADRAPLEX RECEPTACLE, 20 AMPS U.O.N.	14" UON
	120 VOLT SIMPLEX RECEPTACLE, 20 AMPS U.O.N.	14" UON
	SINGLE SPECIAL PURPOSE RECEPT W/ VOLTS, AMPS, & PHASE AS NOTED, NEMA CONFIGURATION AS REQUIRED BY EQUIP.	14" UON
	RECEPTACLE MOUNTED ON DROP CORD, 120 VOLT, 20 AMP, UON, OUTLET BOX FLUSH WITH CEILING	
$	SINGLE POLE TOGGLE SWITCH	48"
$2	DOUBLE POLE TOGGLE SWITCH	48"
$3	THREE WAY TOGGLE SWITCH	48"
$T	SWITCH WITH TIMER	48"
$M	MANUAL MOTOR STARTER SWITCH (WP=NEMA 3R)	48"
$P	SWITCH WITH PILOT LIGHT (ON WHEN SWITCH IS ON)	48"
$K	KEY OPERATED SWITCH	48"
	NOTE: RECEPTACLES ON A DEDICATED CIRCUIT (THAT IS, NO OTHER LOAD CONNECTED TO THE BRANCH CIRCUIT) SHALL HAVE AMPACITY RATING NOT LESS THAN THE AMPERAGE OF THE CIRCUIT BREAKER SERVING THE DEVICE.	
	CONDUIT/RACEWAYS	
	CONDUIT CONCEALED ABOVE CEILNG OR IN WALL	
	CIRCUIT HOMERUN TO PANELBOARD W/ MIN 2#12, 1#12G, 3/4"C	
	CONDUIT TURNING UP	
	CONDUIT TURNING DOWN	
	CONDUIT CONCEALED IN OR BELOW SLAB (OR UNDERGROUND)	
	FLEXIBLE LIGHT FIXTURE WHIP; SIX FOOT MAXIMUM LENGTH	
MC	METAL CLAD CABLE ASSEMBLY - ONLY WHERE INDICATED ON DWGS OR SPECS	
	DISTRIBUTION EQUIPMENT	
	NON-FUSIBLE SAFETY SWITCH, SIZE AND TYPE AS NOTED ON PLANS (AMP/POLES/ENCLOSURE) OR ON SCHEDULE. NEMA 1 ENCLOSURE UNLESS NOTED WP FOR NEMA 3R ENCLOSURE.	6'-6" *
	FUSIBLE SAFETY SWITCH, SIZE & TYPE AS NOTED ON PLANS (AMP/POLES/FUSE AMPS/ENCLOSURE) OR ON SCHEDULE. NEMA 1 ENCLOSURE UNLESS NOTED WP FOR NEMA 3R.	6'-6" *
	FLUSH MOUNTED (RECESSED) PANELBOARD	6'-6" *
	SURFACE MOUNTED PANELBOARD	6'-6" *
	* 6'-6" DISTANCE IS TO TOP-MOST DISCONNECTING DEVICE OR HIGHEST POSITION OF OPERATING HANDLE OF DISCONNECTING DEVICE	

SYMBOL	DESCRIPTION	MTG HT AFF TO CL
	MISCELLANEOUS SYMBOLS	
	GROUND	
M	MOTOR	
EF	EXHAUST FAN MOTOR	
J	JUNCTION BOX	
1	CONDUIT AND WIRE 'MARK' NUMBER, REFER TO CONDUCTORS AND CONDUIT SCHEDULE FOR SIZE	
101	KITCHEN EQUIPMENT 'MARK' NUMBER, REFER TO KITCHEN EQUIPMENT SCHEDULE FOR REQUIREMENTS	
1	NOTE NUMBER	
A	HOOD EXTINGUISHING FS PULL STATION	
D	SMOKE DETECTORS REMOTE STATUS INDICATOR W/ 1/2"C STUB-UP	
	PUSHBUTTON	
B	BELL, TYPE AS NOTED ON PLANS	
PE	PHOTO-ELECTRIC CELL	
T	TRANSFORMER / DRIVER	
S	LOCKABLE SINGLE POLE SWITCH	
S	CEILING MOUNTED AUDIO SPEAKER	
	ABBREVIATIONS	
AFF	ABOVE FINISHED FLOOR	
AFG	ABOVE FINISHED GRADE	
AHU	AIR HANDLING UNIT	
C	CONDUIT	
CL	CENTER-LINE	
CT	CONTACTOR	
EF	EXHAUST FAN	
FLA	FULL LOAD AMPS	
GF/GFI	GROUND FAULT CIRCUIT INTERRUPTER	
GND/ GRD	GROUND	
HT	HEIGHT	
IG	ISOLATED GRD, PROVIDE ORANGE DEVICE WHEN ADJACENT TO WIRING DEVICE	
MOCP	MAXIMUM OVER-CURRENT PROTECTION	
MUA	MAKE UP AIR UNIT	
NEC	LOCALLY ADOPTED EDITION OF THE NATIONAL ELECTRICAL CODE (NFPA 70)	
NL	NIGHT LIGHT (ON 24 HOURS)	
OC	ON CENTER	
POS	POINT OF SALE EQUIPMENT	
RTU	ROOF TOP UNIT	
TB	TERMINAL BLOCK	
TL	TWIST-LOCK TYPE DEVICE	
TR	TAMPER-RESISTANT	
UON	UNLESS OTHERWISE NOTED	
WP	WEATHERPROOF (NEMA 3R)	
	TELEPHONE	
	TELEPHONE OUTLET	18" UON
	TELEPHONE OUTLET AT SPECIAL MOUNTING HEIGHT	60" UON
	NOTE: EACH TELEPHONE OUTLET (FLOOR OR WALL MOUNTED SHALL BE PROVIDED WITH A 3/4" EMPTY CONDUIT, WITH PULL WIRE, TO ACCESSIBLE CEILING SPACE.	
	CCTV / SECURITY SYSTEM	
K	SECURITY ALARM KEYPAD	

POWER PLAN GENERAL NOTES

A. ALL SECURITY, POS, MUSIC, COMMUNICATIONS, AND POWER ROUGH-IN SHALL BE INSTALLED DURING THE FRAMING/ROUGH-IN PHASE OF CONSTRUCTION.

B. REFER TO KITCHEN EQUIPMENT SHEETS FOR EQUIPMENT ELECTRICAL ROUGH-IN ELEVATIONS ABOVE FINISHED FLOOR.

C. ALL EMPTY CONDUITS SHALL BE PROVIDED WITH PULL STRING.

D. PROVIDE INSULATED BUSHING AT TERMINATION POINTS OF ALL CONDUITS FOR LOW VOLTAGE WIRING.

E. THE ELECTRICAL INSTALLER SHALL COORDINATE THE ROUTING OF ALL CONDUIT IN THE BUILDING WITH OTHER TRADES (SPECIFICALLY THE DUCTWORK INSTALLATION) TO AVOID CONFLICTS OF SPACE REQUIREMENTS IN WALLS AND CEILING SPACES.

SECTION C16100
ELECTRICAL GENERAL PROVISIONS

PART 1- GENERAL

1.01 WORK INCLUDED
A. Provide all materials, labor and equipment required to furnish and install a complete electrical system as indicated on drawings and as specified herein.

1.02 REGULATORY REQUIREMENTS
A. Equipment furnished shall be UL listed where such label is available. Installation shall conform to UL standards where applicable.

B. Electrical work shall be installed in accordance with drawings and specifications, NEC and NFPA codes in effect at project location, state and local electrical and building codes and special codes having jurisdiction over specific portions within complete installation.

C. Obtain permits and certificates of approval from all authorities having jurisdiction over the installation and pay all fees required.

1.03 SUBMITTALS
A. Submit list of materials and equipment prior to manufacture, order or installation and within twenty days after award of contract for approval. Include each item of material and equipment whether or not shop drawings are also required. List shall include name of manufacturer, catalog number and other complete identification as well as dimensions and detailed data. Submittals shall be included for the following:
1. Lighting Fixtures
2. Panelboards/Breakers
3. Wiring Devices and Device Plates
4. Enclosed Switches

B. Certified shop drawings and submittals shall bear stamp of approval of contractor as evidence that drawings have been checked. Drawings submitted without this stamp of approval will not be considered and will be returned for proper resubmission.

C. If submittals show variances or substitutions from requirements of contract, contractor shall make specific mention of such variation in his letter of transmittal in order that, if acceptable, suitable action may be taken for proper adjustment. Otherwise contractor shall not be relieved of responsibility for executing work in accordance with contract even though such submittals have been approved.

1.04 SITE VISIT
A. Visit job site prior to bid date to determine actual conditions under which work shall be done, to familiarize oneself with project and to verify total scope of work required. Failure to do so shall not constitute a reason for an extra charge.

SECTION C16101
BASIC MATERIALS AND METHODS

PART 1 - GENERAL

1.01 COORDINATION
A. Obtain and review shop drawings, product data, and manufacturer's instructions for equipment furnished under other sections to determine connection locations and requirements.

B. Sequence rough-in of electrical connections to coordinate with installation and start-up of equipment furnished under other sections.

PART 2 - PRODUCTS

2.01 SUBSTITUTIONS
A. Where specifications list one or more manufacturers and do not include "or approved equal", furnish materials made by one of manufacturers listed. Where "or approved equal" is included, contractor may substitute equal products by another manufacturer subject to approval by engineer and owner.

PART 3 - EXECUTION

3.01 INSTALLATION
A. Make electrical connections to utilization equipment in accordance with equipment manufacturer's instructions.

B. Drawings are diagramatic and shall not be scaled for exact sizes or locations, they are not intended to disclose absolute or unconditional knowledge of actual field conditions.

C. Protect work and materials from damage by weather, entrance of water and dirt. Cap conduit during installation. Avoid damage to materials and equipment in place.

D. Satisfactorily repair or remove and replace damaged work with new materials. Deliver equipment and materials to job site in original, unopened, labeled containers. Store ferrous materials to prevent rusting. Store finished materials and equipment to prevent staining and discoloring.

E. Trenches shall be excavated 6" below elevation of bottom of conduit.

F. Failure to route conduit through building without interfering with other equipment and construction shall not constitute a reason for an extra charge. Equipment, conduit and fixtures shall fit into available spaces in building and shall not be introduced into building at such times and manner as to cause damage to structure. Equipment requiring service shall be readily accessible.

3.02 TESTING AND EQUIPMENT SERVICING
A. Make test to ensure that entire system is in proper operating condition, and that adjustments and apparatus setting of circuit breakers, fuses, control equipment and apparatus have been made. Correct defects discovered during tests.

3.03 REMOVAL OF DEBRIS
A. Remove surplus materials and debris caused by, or incidental to, electrical work. Remove such debris at frequent intervals. Keep job clean during construction.

3.04 IDENTIFICATION OF EQUIPMENT
A. Identify electrical distribution equipment, disconnects, and contactors with black laminated plastic name-plates, attached with two screws, engraved with 1/4" high, white letters.

3.05 TEMPORARY LIGHTING AND POWER IN AREAS OF CONSTRUCTION
A. Provide, maintain and remove after construction is completed, temporary lighting adequate for workman safety and temporary power for all trades including any 3 phase power required.

B. Provide and maintain barricade lighting where required to adequately protect owner against liability for damage to public or personnel. All lamps used in barricade shall be 60 watt red, installed in weatherproof socket with wire guard. All wiring shall be approved for weatherproof installation.

3.06 GUARANTEE-WARRANTY
A. Guarantee work to be free from defects of materials and workmanship for a period of one year from date of final acceptance of building. Repair and replace defective work and other work damaged thereby which becomes defective during term of guarantee-warranty. Furnish owner with three written copies of guarantee-warranty.

SECTION C16120
RACEWAYS AND CONDUIT SYSTEMS

PART 1 - PRODUCTS

1.01 ACCEPTABLE MANUFACTURERS
A. Rigid IMC, and EMT conduit shall be hot-dipped, galvanized, or electro-galvanized steel by Allied, Republic, Triangle, Wheatland, or approved equal.

B. PVC conduit shall be Carlon, schedule 40, 90 degrees C. rated, unless otherwise noted.

C. MC cable shall be manufactured by AFC Cable Systems or approved equal. Type "AC-90" is not allowed. All MC Cables shall have a green equipment ground conductor and an additional isolated ground (green + yellow stripe) conductor for isolated ground circuits (POS system). Fittings used for connecting MC cable to boxes, cabinets, or other equipment shall be listed and identified for such use.

D. Associated couplings, connectors and fittings shall be steel as manufactured by Raco or equivalent. Catalog numbers used below are those of Raco.

E. Erickson Couplings, Series 1502, shall be used where neither length of conduit can be rotated.

F. Insulated bushings shall be series 1402.

G. EMT box connectors shall be compression or set-screw fittings.

H. Conduit, connectors, couplings and fittings shall be UL listed and labeled.

1.02 ELECTRICAL METALLIC TUBING (EMT)
A. Use Electrical Metallic Tubing (EMT) where drawings call for conduit to be:
1. Concealed in walls.
2. Installed above suspended ceilings.
3. Installed exposed, above 6 feet.
4. Installed for panelboard feeders above slab.

1.03 INTERMEDIATE METAL CONDUIT (IMC)
A. Use Intermediate Metal Conduit (IMC) where drawings call for conduit to be:
1. Installed for panelboard feeders ran below ground.
2. Installed in wet locations (interior and exterior).
3. Installed exposed below 6 feet.

1.04 POLYVINYL CHLORIDE (PVC) RACEWAY
A. Use PVC raceway for:
1. Underground service entrance conduits for telephone and power.
2. Exterior branch circuits installed underground.
3. Interior branch circuit conduits installed in or under concrete slab on ground floor.

1.05 RIGID STEEL CONDUIT (RSC)
A. Use Rigid Steel Conduit for:
1. Install underground for power Service Entrance elbows penetrating floor slab.
2. Exposed to physical damage.

1.06 FLEXIBLE METAL CONDUIT
A. Provide flexible metal conduit for termination at equipment subject to motion and vibration.

B. Length shall not exceed 6 feet in accessible ceiling areas.

C. Shall not be concealed in walls.

D. Where exposed to continuous or intermittent moisture, conduit shall be UL Type EF liquidtight or type as indicated.

E. For connection to ceiling mounted lighting fixtures from outlet boxes.

1.07 MC (METAL-CLAD) CABLE
A. MC Cable shall be UL listed per standard 1569, color coded copper conductors (type THHN), the sheathing shall be constructed of interlocking galvanized steel, and shall conform to the requirements of Article 330 of the National Electrical Code.

B. MC Cable with an isolated grounding conductor shall be used, concealed above ceiling and in walls, for the connection of the Point Of Sales (POS) system equipment from the isolated ground receptacles to the panelboard serving the POS loads when allowed by local codes and Article 330 of the National Electrical Code.

C. MC Cable may be used when allowed by local codes and Article 330 of the National Electrical Code for branch circuits (except the main homerun to the panelboard which shall be conduit with conductors) for the following:
1. Lighting
2. Dining area receptacles
3. Fly Lights
4. Building mounted signage
5. Office area receptacles

D. MC Cable shall not be used for branch circuits serving Kitchen Equipment Items and similar circuits in the Kitchen, the Drive-Thru area, and the Serving area's back counter.

PART 2 - EXECUTION

2.01 INSTALLATION
A. Minimum size of conduits shall be 1/2 inch.

B. Run concealed conduits in direct line with long sweep bends or offsets. Run exposed conduits parallel to and at right angles to building lines. Group multiple conduit runs in banks.

C. Cap ends of conduits to prevent entrance of water and other foreign material during construction.

D. Provide No. 12 AWG copper pull wires or nylon cord in all empty conduits. Steel wire not acceptable as pull wire.

E. Where IMC enters a cabinet, junction box, or pull box conductors shall be protected by an insulated bushing. Locknuts shall be installed on conduit outside and inside enclosure.

F. In areas where enclosed and gasketed fixtures and weatherproof devices are specified, where Rigid Conduit enters a sheet metal enclosure, junction box and outlet box, and not terminated in a threaded hub, a steel, or malleable iron nylon insulated hub, complete with recessed sealing "O"ring or sealing locknut shall be used.

G. Provide seal-off fitting in all conduits entering a cold temperature area such as freezers and dry refrigerators.

H. In concrete slabs, block up conduit from forms and securely fasten in place. all conduits in slabs shall have a minimum of 4" inches concrete coverage above.

I. Failure to route conduit through building without interfering with other equipment, and construction shall not constitute a reason for an extra charge. Equipment, conduit, and fixtures shall fit into available spaces in building and shall not be introduced into building at such times and manner as to cause damage to structure or equipment. Equipment requiring servicing shall be readily accessible.

G. Provide seal-off fitting in all conduits entering a cold temperature area such as freezers and dry refrigerators.

H. In concrete slabs, block up conduit from forms and securely fasten in place. all conduits in slabs shall have a minimum of 4" inches concrete coverage above.

I. Failure to route conduit from building without interfering with other equipment, and construction shall not constitute a reason for an extra charge. Equipment, conduit, and fixtures shall fit into available spaces in building and shall not be introduced into building at such times and manner as to cause damage to structure or equipment. Equipment requiring servicing shall be readily accessible.

2.02 EMT (ELECTRICAL METALLIC TUBING) RACEWAY
A. Do not use Electrical Metallic Tubing in cinder concrete or cinder fill or where conduit system is in contact with dissimilar metals or in wet locations.

2.03 PVC RACEWAY
A Use threaded fittings for all connectors and adapters.

B. Provide 1/4-inch nylon pull rope in all primary power and incoming telephone service entrance conduits.

C. PVC conduit shall convert to galvanized rigid metal per detail on drawings.

2.04 FLEXIBLE METAL CONDUIT
A. Where fittings for liquid tight flexible conduit are brought into an enclosure with a knock-out, a gasket assembly, consisting of one piece "O" ring, with Buna-N sealing material, series 3400, shall be installed on outside of box. Fittings shall be made of either steel or malleable iron only, and shall have insulated throats or insulated bushings.

B. In dry locations, where final connections to motors and other equipment may be made with Flexible Metal Conduit, fittings shall be of steel or malleable iron only with insulated throats or insulated bushings, and shall be of wedge and screw type having an angular wedge fitting between convolutions of conduit.

2.05 MC CABLE
A. MC Cable may be used for branch circuits as noted in Part 1 above and where the local code allows use of MC Cable. The installation shall conform to Article 330 of the National Electrical Code and shall be concealed in walls and above ceilings. (Exposed MC Cable will not be acceptable.)

B. MC Cables shall be secured and supported by the building structure per the National Electrical Code and any local code requirements. MC Cable shall not lay on ceilings.

SECTION C16121
CONDUCTORS

PART 1 - PRODUCTS

1.01 CONDUCTORS
A. Provide 98% conductivity copper conductors with 600-volt insulation. For conductors No. 12 AWG and No. 10 AWG, provide solid type. For all conductors No. 8 AWG and larger, provide stranded type. All conductors shall have THHN/THWN insulation unless noted otherwise.

B. Conductors shall be manufactured by Triangle, American, Rome, Southwire or approved equal.

C. Provide No. 14 AWG type THHN fixture conductors, for conductors entering lighting fixtures.

D. Branch circuit conductors shall be minimum #12 AWG, copper.

PART 2 - EXECUTION

2.01 INSTALLATION
A. Install pull boxes in circuits or feeders over 100 feet long.

B. Make all splices or connections only at outlet, pull or junction boxes.

C. All conductors and connections shall test free of grounds, shorts, and opens prior to energizing circuit.

D. Provide No. 10 wire in lieu of No. 12 wire for any branch circuit in excess of 100 feet linear length to prevent excessive voltage drop.

E. Use Ideal wing nuts, Scotchlok Type Y, R, G, or B, or approved equivalent connectors for fixture connections at outlet boxes.

F. Make feeder taps and joints with OZ Type T, PT, PM or PTS, or approved equivalent clamp connectors as manufactured by Kupler, or with approved compression sleeves. Wrap connectors with No. 10 Electro-Seal or approved equivalent plastic filler and vinyl tape.

G. Leave a minimum of 8" slack wire in every outlet box.

H. Provide color coded wire and with a different color for each phase and neutral and ground as follows: Phase A, B, C: Black, Red and Blue respectively; Neutral: White; Isolated Ground: Green with Yellow Stripes. Approved color tape is acceptable for feeders using larger than #6 conductors.

I. All conductors shall be continuous from origin to panel or equipment termination without splices where possible. Where splices and taps are necessary or are required, they shall be made in splice boxes with suitable connectors.

J. Tighten all electrical connectors and terminals, including screws and bolts, in accordance with manufacturer's published torque tightening values. Where manufacturer's torquing requirements are not indicated,tighten connectors and terminals to comply with tightening torques specified in UL486A and UL486B.

SECTION C16122
OUTLET AND JUNCTION BOXES

PART 1 - GENERAL

1.01 PROJECT CONDITIONS
A. Verify field measurements are as shown on drawings.

B. Verify locations of floor boxes and outlets in work areas prior to rough-in.

PART 2 - PRODUCTS

2.01 OUTLET BOXES

A. Sheet metal outlet boxes: galvanized steel.

B. Cast boxes: type FS, cast feralloy. Provide gasketed cover by box manufacturer.

C. Manufacturers: National, Appleton, General Electric, RACO, or Steel City.

D. Provide boxes for fixtures with fixture studs in center.

E. Outlet boxes for lighting, switches and receptacles in interior areas with exposed conduit shall be pressed steel and in exterior areas with exposed conduit shall be cast metal with threaded hubs, "FS" type. Use galvanized steel for concealed boxes. Boxes shall be 1-1/2" deep minimum.

Chick-fil-A
5200 Buffington Road
Atlanta, Georgia
30349-2998

Kurzynske & Associates
2705 Lebanon Pike - Suite One
Nashville, Tennessee 37214
Telephone: (615) 255-5203

ALABAMA REGISTERED PROFESSIONAL ENGINEER MARK T. KURZYNSKE
06/21/24

CHICK-FIL-A VALLEY, AL

3215 20TH AVENUE
VALLEY, AL 36854

FSR#05772

BUILDING TYPE / SIZE: BTS LS BP
RELEASE: 23.09
PRINTED FOR
CONSTRUCTION

REVISION SCHEDULE

NO.	DATE	DESCRIPTION

CONSULTANT PROJECT # 24035.CC.S
DATE 03/27/2024
DRAWN BY ES

Information contained on this drawing and in all digital files produced for above named project may not be reproduced in any manner without express written or verbal consent from authorized project representatives.

SHEET
GENERAL NOTES, LEGENDS, AND SPECIFICATIONS

SHEET NUMBER
E-001

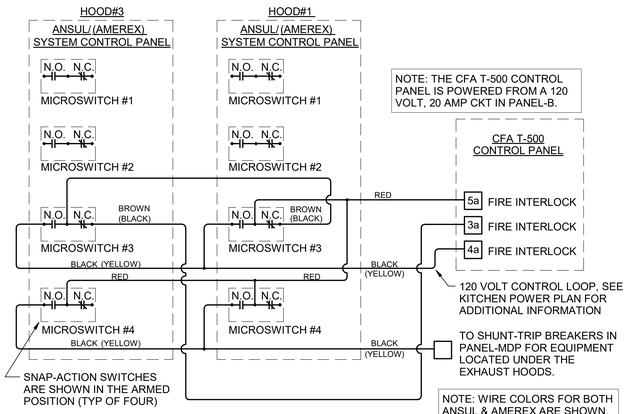

D4 FIRE SUPPRESSION SYSTEM PANEL WIRING DIAGRAM
NO SCALE

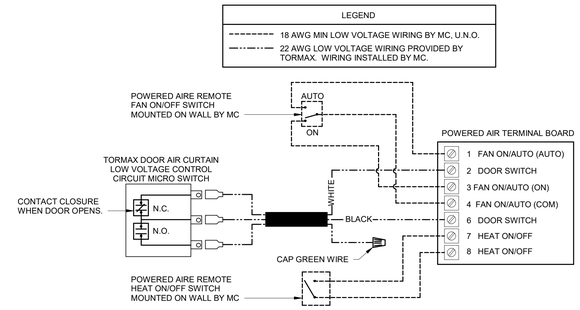

E3 AIR CURTAIN WIRING DIAGRAM
NO SCALE

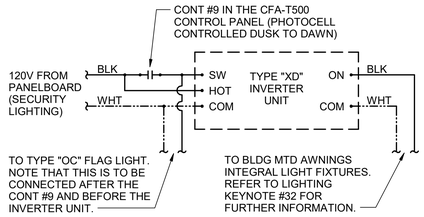

D3 INVERTER XD WIRING DIAGRAM
NO SCALE

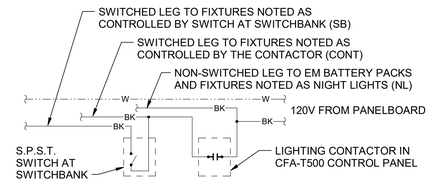

D2 LIGHTING CONTROL DIAGRAM
NO SCALE

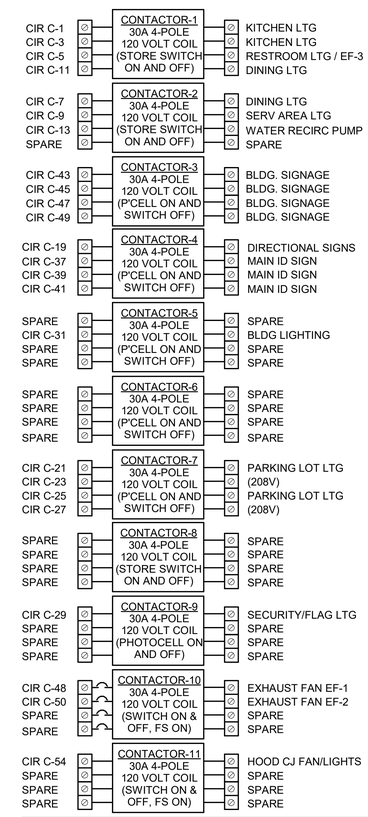

NOTES:
1) VERIFY WITH SUNCOAST ENVIRONMENTAL CONTROLS' SHOP DRAWINGS.
2) ONLY THE 'HOT' CONDUCTOR OF EACH CIRCUIT SHALL BE RUN THRU THE CONTACTOR.
3) ANY TAPS OR WIRING CONNECTIONS OTHER THAN TO THE TERMINALS SHALL BE DONE IN A JUNCTION BOX OUTSIDE OF THIS CABINET.
4) VERIFY WITH THE LOCAL CODE IF CONTACTORS #10 AND #11 WILL BE ON OR OFF WHEN THE FS SYSTEM IS INITIATED.
5) CIRCUITS C-49, C-25, AND C-27 WILL BE SPARES IF NOT NEEDED.

PER IECC 2015 SECTION C-405.2.2

CONTRACTOR SHALL COORDINATE WITH SUNCOAST ON PROVIDING AN AUTOMATIC TIME SWITCH THAT COMPLIES WITH SECTION C-405.2.2.1

C1 CFA-T500 CONTROL PANEL DIAGRAM
NO SCALE

SEQUENCE OF OPERATION

STORE SWITCH IN "STORE OPEN" POSITION

A. INFRARED HEATERS ARE ENABLED.
B. COOLING FANS ARE ENABLED.
C. LIGHTS ARE ENABLED.
D. MASTER AUTO/OFF SWITCH FOR IR HEATERS AND COOLING FANS. PROVIDE SINGLE POINT ON/OFF CONTROL.

STORE SWITCH IN "STORE CLOSED" POSITION

A. INFRARED HEATERS ARE DISABLED.
B. COOLING FANS ARE DISABLED.
C. LIGHTS ARE DISABLED.

NOTES

1. CONTRACTOR SHALL PURCHASE CONTROL PANEL DIRECT FROM SUNCOAST ENVIRONMENTAL CONTROLS (727-544-6679).
2. COORDINATE WITH GC TO ESTABLISH LOCATION TO MOUNT PANEL IN A CONDITIONED SPACE INSIDE THE BUILDING. SUGGESTED LOCATION IS SURFACE MOUNTED DIRECTLY ABOVE THE LOCATION OF THE CFA-T500 CONTROL PANEL.
3. THE SUNCOAST ENVIRONMENTAL CONTROLS (SEC) IS TO BE SURFACE MOUNTED, UNLESS OTHERWISE REQUESTED TO SUNCOAST.
4. PROVIDE LAMINATED LEGEND SHOWING NAMED LOCATIONS OF FANS AND IR HEATERS. MOUNT LEGEND AT PANEL.

LEGEND

SEC SUNCOAST ENVIRONMENTAL CONTROLS (SUPPLIER OF CONTROL PANELS)
LOW VOLTAGE BY CONTRACTOR
LOW VOLTAGE WIRING BY SUNCOAST
120 VOLT BY CONTRACTOR
120 VOLT BY SUNCOAST

SUNCOAST RELAYS CONTACTORS SHOWN IN DE-ENERGIZED "STORE UNOCCUPIED" CONDITION. RELAYS AND CONTACTORS FACTORY INSTALLED BY SEC IN CONTROL PANEL. RELAYS AND CONTACTORS ENERGIZED VIA "STORE OPEN/CLOSED" SWITCH.

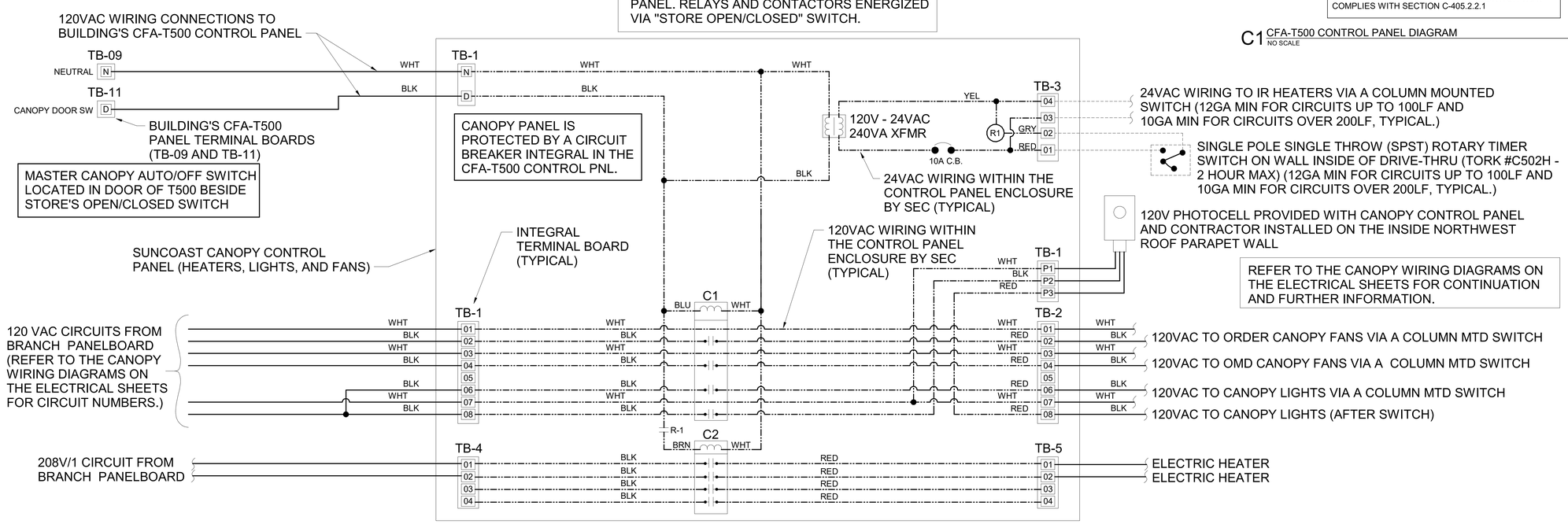

A1 SUNCOAST CANOPY CONTROL PANEL WIRING DIAGRAM
NO SCALE

Chick-fil-A
5200 Buffington Road
Atlanta, Georgia
30349-2998

Kurzynske & Associates
2705 Lebanon Pike - Suite One
Nashville, Tennessee 37214
Telephone: (615) 255-5203

ALABAMA REGISTERED PROFESSIONAL ENGINEER MARK T. KURZYNSKE
06/21/24

CHICK-FIL-A
VALLEY, AL
3215 20TH AVENUE
VALLEY, AL 36854

FSR#05772

BUILDING TYPE / SIZE: BTS LS BP
RELEASE: 23.09
PRINTED FOR
CONSTRUCTION

REVISION SCHEDULE
NO. DATE DESCRIPTION

CONSULTANT PROJECT # 24035.CC.S
DATE 03/27/2024
DRAWN BY ES

Information contained on this drawing and in all digital files produced for above named project may not be reproduced in any manner without express written or verbal consent from authorized project representatives.

SHEET
WIRING DIAGRAMS

SHEET NUMBER
E-702

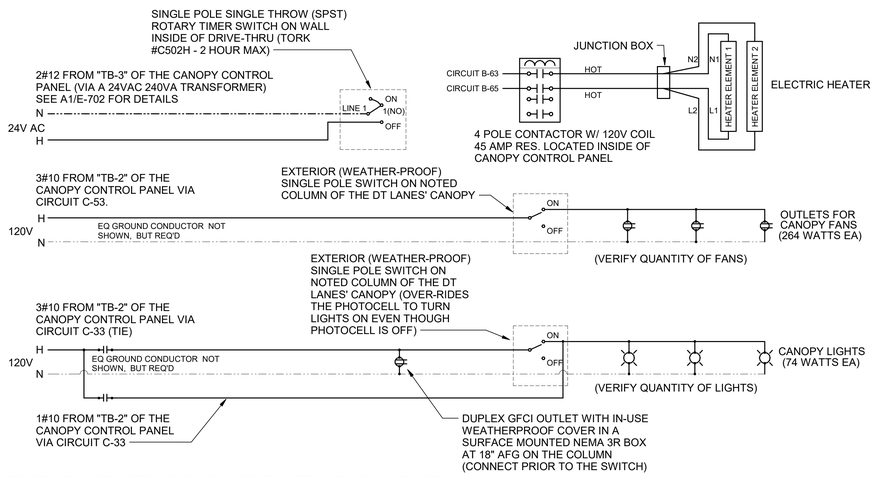

C4 OUTSIDE MEAL DELIVERY (OMD) CANOPY POWER WIRING SCHEMATIC
N.T.S.

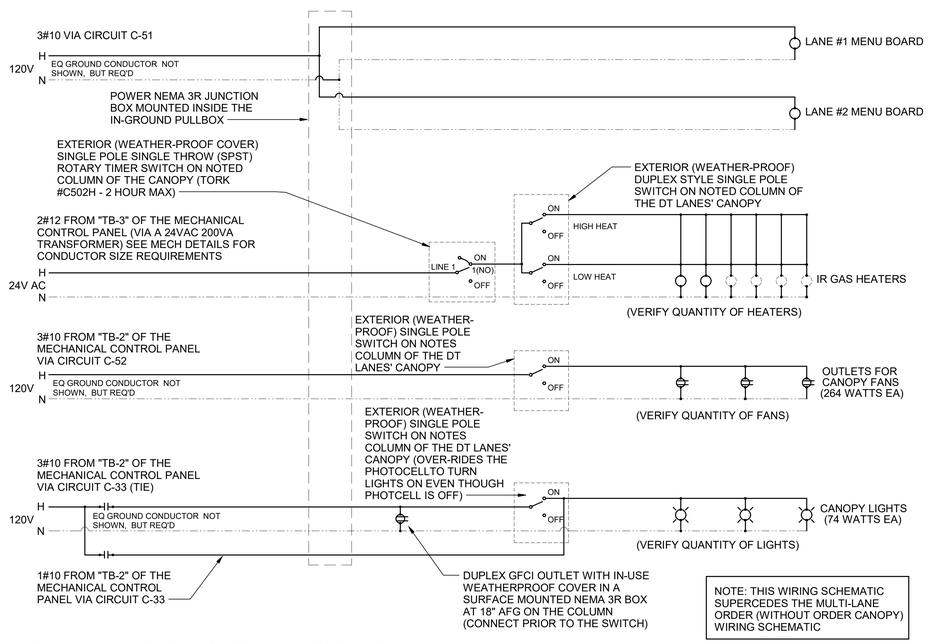

NOTE: THIS WIRING SCHEMATIC SUPERCEDES THE MULTI-LANE ORDER (WITHOUT ORDER CANOPY) WIRING SCHEMATIC

A4 MULTI-LANE ORDER CANOPY POWER WIRING SCHEMATIC
N.T.S.

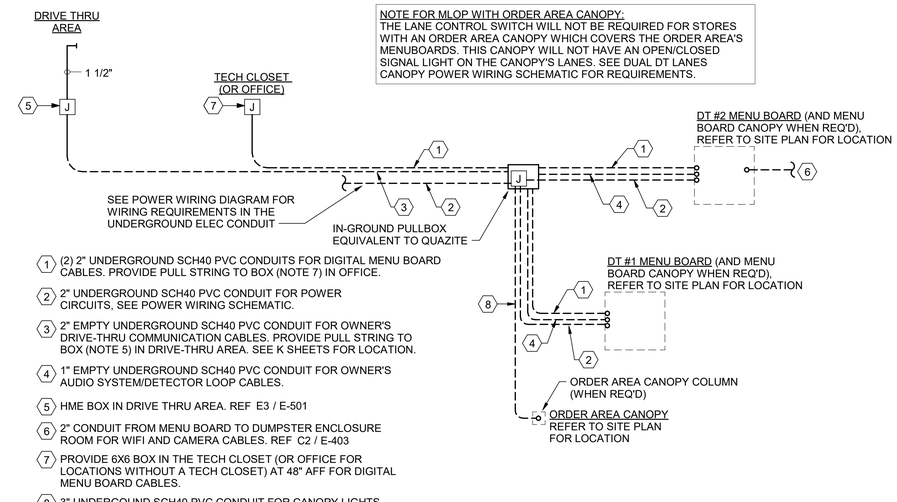

1. (2) 2" UNDERGROUND SCH40 PVC CONDUITS FOR DIGITAL MENU BOARD CABLES. PROVIDE PULL STRING TO BOX (NOTE 7) IN OFFICE.
2. 2" UNDERGROUND SCH40 PVC CONDUIT FOR POWER CIRCUITS, SEE POWER WIRING SCHEMATIC.
3. 2" EMPTY UNDERGROUND SCH40 PVC CONDUIT FOR OWNER'S DRIVE-THRU COMMUNICATION CABLES. PROVIDE PULL STRING TO BOX (NOTE 5) IN DRIVE-THRU AREA. SEE K SHEETS FOR LOCATION.
4. 1" EMPTY UNDERGROUND SCH40 PVC CONDUIT FOR OWNER'S AUDIO SYSTEM/DETECTOR LOOP CABLES.
5. HME BOX IN DRIVE THRU AREA. REF E3 / E-501
6. 2" CONDUIT FROM MENU BOARD TO DUMPSTER ENCLOSURE ROOM FOR WIFI AND CAMERA CABLES. REF C2 / E-403
7. PROVIDE 6X6 BOX IN THE TECH CLOSET (OR OFFICE FOR LOCATIONS WITHOUT A TECH CLOSET) AT 48" AFF FOR DIGITAL MENU BOARD CABLES.
8. 3" UNDERGOUND SCH40 PVC CONDUIT FOR CANOPY LIGHTS, CANOPY FANS, AND CANOPY HEATERS (ONLY FOR LOCATIONS WITH ORDER POINT CANOPY).

C1 MULTI-LANE ORDER POINT (MLOP) DRIVE-THRU CONDUIT REQUIREMENTS
NO SCALE

Chick-fil-A
5200 Buffington Road
Atlanta, Georgia
30349-2998

Kurzynske & Associates
2705 Lebanon Pike - Suite One
Nashville, Tennessee 37214
Telephone: (615) 255-5203

ALABAMA REGISTERED PROFESSIONAL ENGINEER MARK T. KURZYNSKE
06/21/24

CHICK-FIL-A
VALLEY, AL
3215 20TH AVENUE
VALLEY, AL 36854

FSR#05772

BUILDING TYPE / SIZE: BTS LS BP
RELEASE: 23.09
PRINTED FOR
CONSTRUCTION

REVISION SCHEDULE

NO.	DATE	DESCRIPTION

CONSULTANT PROJECT # 24035.CC.S
DATE 03/27/2024
DRAWN BY ES

Information contained on this drawing and in all digital files produced for above named project may not be reproduced in any manner without express written or verbal consent from authorized project representatives.

SHEET
WIRING DIAGRAMS

SHEET NUMBER
E-703

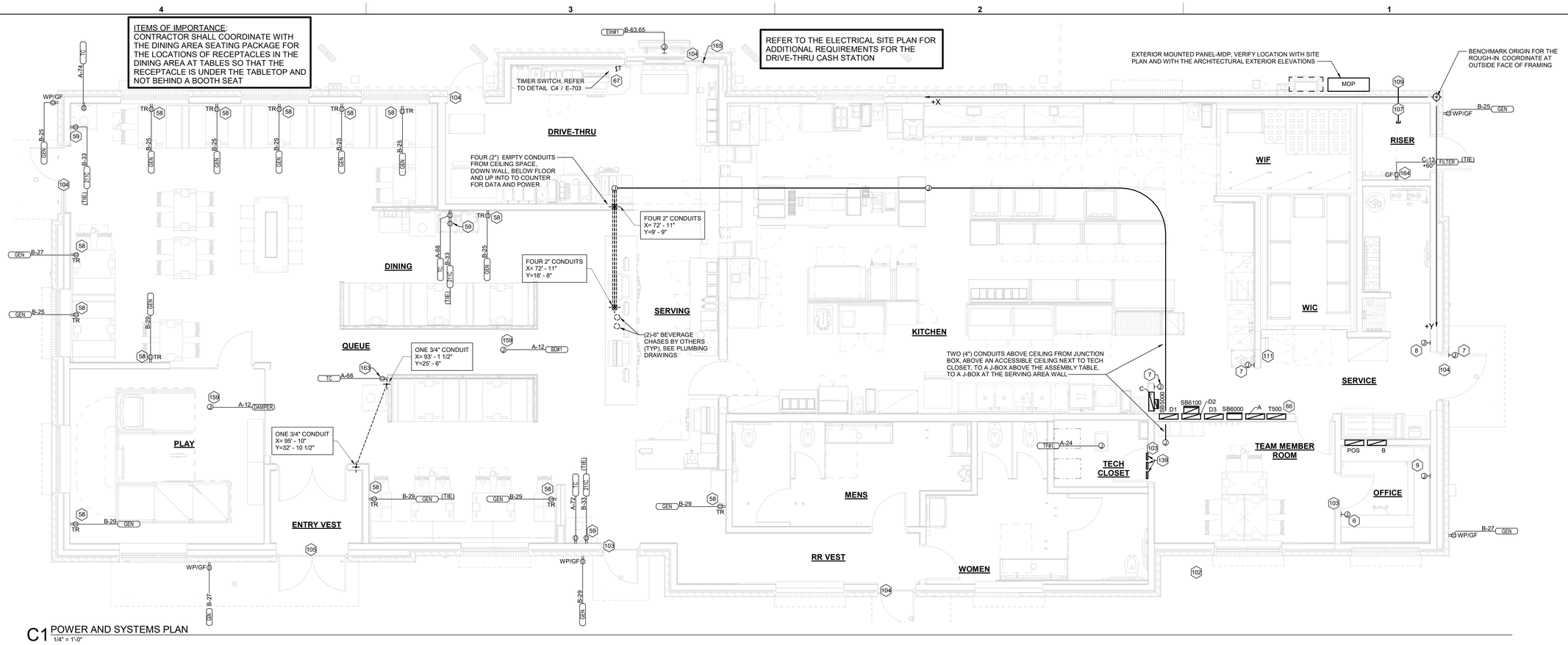

C1 POWER AND SYSTEMS PLAN
1/4" = 1'-0"

ELECTRICAL KEYNOTES

6 CO2 CENTRAL CONTROL UNIT - PROVIDE SINGLE-GANG BACKBOX AT 60" AFF WITH 3/4" CONDUIT STUBBED ABOVE ACCESSIBLE CEILING SPACE

7 CO2 ANNUNCIATOR UNIT - PROVIDE SINGLE-GANG BACKBOX AT 60" AFF WITH 3/4" CONDUIT STUBBED ABOVE ACCESSIBLE CEILING SPACE

8 CO2 SENSOR UNIT - PROVIDE SINGLE-GANG BACKBOX AT 12" AFF WITH 3/4" CONDUIT STUBBED ABOVE ACCESSIBLE CEILING SPACE

9 CO2 POWER SUPPLY - PROVIDE SINGLE-GANG BACKBOX AT 18" BELOW CEILING WITH 3/4" CONDUIT STUBBED ABOVE ACCESSIBLE CEILING SPACE. PROVIDE DUPLEX OUTLET, AND CONNECT TO A LOCAL GENERAL OUTLET CIRCUIT. FIELD VERIFY EXACT LOCATION WITH STRONG SYSTEMS 800-500-5566

58 TAMPER RESISTANT (TR) DUPLEX RECEPTACLE (IN DINING AREAS) WITH USB CHARGER SHALL BE COOPER/ARROW HART #TR7756-B (BROWN) WITH MATCHING COLOR 'DECOR' STYLE PLATE. VERIFY COLOR WITH OWNER.

59 PROVIDE DUPLEX RECEPTACLE IN AN ARLINGLTON #DVFR2W DOUBLL-GANG RECESSED BOX FOR THE FLY LIGHT SYSTEM ITEMS. DO NOT CUT THE CORDSET FURNISHED WITH THE UNIT. COIL THE CORD ON THE BACK OF THE UNIT AND TUCK INTO THE BACKBOX.

64 PROVIDE TWO 6"H X 6"W X 4"D J-BOXES (ONE FOR TELEPHONE AND ONE FOR ISP) AT 6'-6" AFF AND EXTEND A 2" CONDUIT WITH PULL STRING IN THE WALL FROM EACH J-BOX INTO THE ACCESSIBLE CEILING SPACE. PROVIDE A 36" X 36" X 3/4" PLYWOOD BACKBOARD ON THE WALL ABOVE THE J-BOXES (AT THE CEILING) FOR USE BY THE ISP. PROVIDE A COPPER GROUND BAR (EQUAL TO ERICO TGBA2AL14P) AT THE BOTTOM OF THE BACKBOARD WITH A #6 AWG INSULATED CU GROUNDING CONDUCTOR IN A 3/4"C FROM THE GROUND BAR TO THE INTER SYSTEM BONDING TERMINATION NEXT TO THE SERVICE ENTRANCE. THE GROUND BAR SHALL HAVE TAPS FOR USE BY THE TELEPHONE AND ISP UTILITY COMPANIES AND FOR THE #6 COMMUNICATIONS GROUNDING CONDUCTOR TO THE GES. PROVIDE A 15 AMP ISOLATED GROUND (IG) ORANGE-FACED DUPLEX RECEPTACLE IN THE WALL BESIDE THE BACKBOARD AND LABEL THE RECEPTACLE "FOR FIBER TO CABLE MODEM USE ONLY". BOND NETWORK RACKS TO GROUND BAR.

66 THE STORE OPEN-CLOSE UNIT SWITCH IS FURNISHED WITH THE CFA-T500 CONTROL PANEL AND FACTORY INSTALLED IN THE DOOR OF THE CFA-T500 CABINET.

67 TIMER SWITCH FOR OUTSIDE ELECTRIC HEATER. REFER TO DETAILS SHEET E-502 AND WIRING DIAGRAMS E-703.

102 PROVIDE A 1/2" CONDUIT THRU THE EXTERIOR WALL AND STUBBED INTO THE ACCESSIBLE CEILING SPACE FOR THE EXTERIOR WALL MOUNTED AUDIO-VISUAL ALARM NOTIFICATION DEVICE. VERIFY LOCATION WITH THE EXTERIOR ELEVATIONS AND WITH THE SECURITY INSTALLER - TYPICALLY TO BE LOCATED NEAR THE FIRE PROTECTION SYSTEM'S EXTERIOR ALARM UNIT AND VISIBLE FROM THE STREET.

103 EXTEND 1/2" RIGID CONDUIT FROM TOP OF STRIKE-SIDE DOOR FRAME CHANNEL TO ABOVE ACCESSIBLE CEILING.

104 EXTEND 3/4" RIGID CONDUIT FROM TOP OF STRIKE-SIDE DOOR FRAME CHANNEL TO ABOVE ACCESSIBLE CEILING.

105 EXTEND 1/2" CONDUIT FROM A POINT 3" WITHIN EITHER HINGE-SIDE DOOR VERTICAL FRAME MULLION TO ABOVE ACCESSIBLE CEILING.

107 PROVIDE SINGLE GANG JUNCTION BOX WITH STAINLESS STEEL COVER PLATE MOUNTED ABOVE THE CEILING SPACE AND ABOVE ON THE INTERIOR SIDE OF THE REAR DOOR. ROUTE 1" CONDUIT FROM THE BOX TO THE "109" BOX NOTED BELOW.

109 PROVIDE SINGLE GANG, WEATHER-PROOF JUNCTION BOX WITH STAINLESS STEEL COVER PLATE MOUNTED ABOVE THE REAR DOOR ON THE EXTERIOR WALL. ROUTE 1" CONDUIT FROM THE BOX AND INTO THE BUILDING AND TERMINATE CONDUIT IN THE BOX NOTED IN "107" ABOVE.

111 PROVIDE JUNCTION BOX ON THE LATCH SIDE OF THE ROOF ACCESS HATCH WITH 1/2" CONDUIT ABOVE THE CEILING TO AN ACCESSIBLE CEILING SPACE FOR A DOOR CONTACT.

139 ACCESS CONTROL PANELS LOCATED ABOVE DOOR. SECURITY CONTRACTOR TO INSTALL AND PROVIDE POE.

159 PROVIDE A 120 VOLT CONNECTION TO THE MOTORIZED DAMPER.

ELECTRICAL KEYNOTES

163 SURFACE MOUNT AN ELECTRICAL BACKBOX AT 12" AFF (SECURED TO LOW WALL) WITH A DUPLEX RECEPTACLE OUTLET WITH UNDER-SLAB CONDUIT. COORDINATE THE ROUGH-IN LOCATION OF THE UNDER-SLAB CONDUIT TURN-UP WITH THE FURNITURE PLANS.

164 ON/OFF SWITCH FOR AIR CURTAIN PROVIDED AND INSTALLED BY MECHANICAL CONTRACTOR.

165 EXTEND 3/4" CONDUIT THRU 1" HOLE CENTERED IN THE WIDTH OF THE HEADER ABOVE WHERE DOOR JAMB LINES UP FOR LOW VOLTAGE WIRING. VERIFY WITH STRUCTURAL ON EXACT LOCATION.

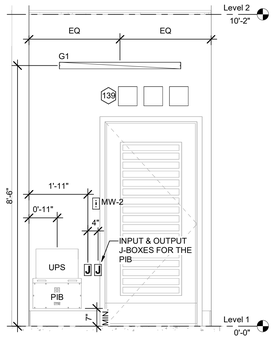

B3 TECH CLOS. ELEV LEFT
1/2" = 1'-0"

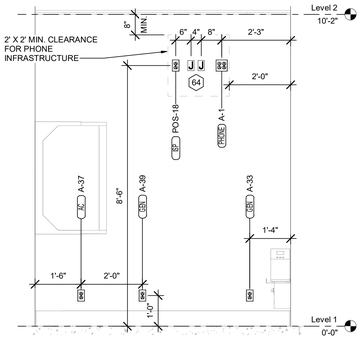

B2 TECH CLOS. ELEV CENTER
1/2" = 1'-0"

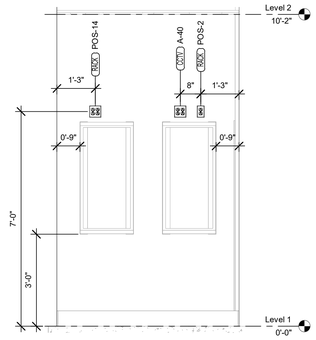

B1 TECH CLOS. ELEV RIGHT
1/2" = 1'-0"

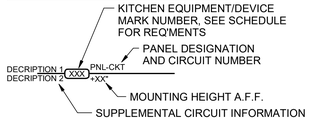

A3 KITCHEN EQUIP NOMENCLATURE
NO SCALE

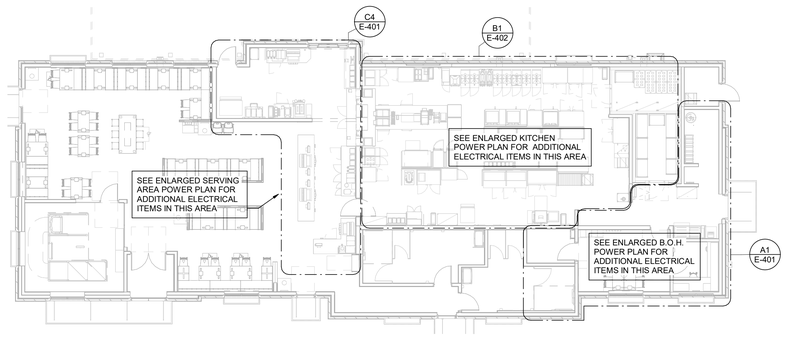

A1 ELECTRICAL KEY PLAN
N.T.S.

Chick-fil-A
5200 Buffington Road
Atlanta, Georgia
30349-2998

Kurzynske & Associates
2705 Lebanon Pike - Suite One
Nashville, Tennessee 37214
Telephone: (615) 255-5203

ALABAMA REGISTERED PROFESSIONAL ENGINEER MARK T. KURZYNSKE
06/21/24

CHICK-FIL-A
VALLEY, AL
3215 20TH AVENUE
VALLEY, AL 36854

FSR#05772

BUILDING TYPE / SIZE: BTS LS BP
RELEASE: 23.09
PRINTED FOR
CONSTRUCTION

REVISION SCHEDULE

NO.	DATE	DESCRIPTION

CONSULTANT PROJECT #	24035.CC.S
DATE	03/27/2024
DRAWN BY	ES

Information contained on this drawing and in all digital files produced for above named project may not be reproduced in any manner without express written or verbal consent from authorized project representatives.

SHEET
POWER AND SYSTEMS PLAN

SHEET NUMBER
E-104

2.02 PULL AND JUNCTION BOXES
A. Sheet metal boxes: galvanized steel.

B. Surface-mounted cast metal box: type 4; flat-flanged, surface-mounted junction box.
1. Material: galvanized cast iron.
2. Cover: furnish with ground flange, neoprene gasket, and stainless steel cover screws.

C. In-ground cast metal box: inside flanged, recessed cover box for flush mounting.
1. Material: galvanized cast iron.
2. Cover: nonskid cover with neoprene gasket and stainless steel cover screws.
3. Cover legend: electric.

D. Manufacturers: National, Appleton, General Electric, RACO, Oz-Gedney or Steel City.

PART 3 - EXECUTION

3.01 INSTALLATION
A. Install electrical boxes as shown on drawings, and as required for splices, taps, wire pulling, equipment connections and compliance with regulatory requirements.

B. Install pull boxes and junction boxes above accessible ceilings.

C. Inaccessible ceiling areas: Install outlet and junction boxes no more than 6 inches from ceiling access panel or from removable recessed light fixture.

D. Use flush mounting outlet boxes in finished areas.

E. Use stamped steel bridges to fasten flush mounting outlet box between studs.

F. Install flush mounted box without damaging wall insulation or reducing its effectiveness.

G. Use adjustable steel channel fasteners for hung ceiling outlet box.

H. Do not fasten boxes to ceiling support wires.

I. Support boxes independently of conduit, except cast box that is connected to two Rigid Metal Conduits both supported within 12 inches of box.

J. Use gang box where more than one device is mounted together. Do not use sectional box.

K. Use gang box with plaster ring for single device outlets.

L. Use cast outlet box in exterior locations and wet locations.

3.02 OUTLET BOXES
A. Select boxes according to intended use and type of outlet. Ceiling outlet boxes shall be 4" octagon and 1-1/2" deep. Use 2-1/8" deep octagon boxes or 4" square boxes required. All ceiling outlet boxes shall have a fixture stud of no bolt self-locking type installed if required to hang the fixture specified at the outlet.

3.03 JUNCTION BOXES
A. Junction boxes shall be sized according to number of conductors in box or type of service to be provided. Minimum junction box size 4-11/16" square and 2-1/8" deep. Provide screw covers for junction boxes.

B. Use code gauge steel with screw covers for pull boxes with prime coat and provide with screw cover. Size pull boxes according to the NEC.

C. Provide pull box every 100 feet of conduit run or where excessive number of bends necessitates a box for ease of wire installation.

SECTION C16123
GROUNDING AND BONDING

PART 1 - PRODUCTS

1.01 ROD ELECTRODES
A. Material: copper-clad steel.

B. Diameter: 3/4 inch.

C. Length: 10 feet.

1.02 MECHANICAL CONNECTORS
A. Material: bronze.

1.03 GROUNDING CONDUCTOR (WIRE)
A. Material: stranded copper, sized to meet NFPA 70, Article 250 requirements.

PART 2 - EXECUTION

2.01 INSTALLATION
A. Install rod electrodes at locations indicated. Install additional rod electrodes as required to achieve resistance to ground of less than 25 ohms.

B. Provide grounding electrode conductor and connect to reinforcing steel in foundation footing.

C. Provide bonding to meet regulatory requirements.

D. Bond together each metallic raceway, pipe, duct and other metal objects.

E. Provide isolated grounding conductor for circuits supplying all isolated ground outlets. Insulation shall be green with yellow stripe. Size per NEC Table 250.66. This isolated grounding conductor shall run in addition to equipment grounding conductor and along with the branch circuit conductors.

2.02 GROUNDING
A. Ground electrical system in accordance with NEC Article 250 and local authorities having jurisdiction.

B. Install a #3/0 bare copper wire bond across the water meter attached to ground clamps on water line on each side of meter. Arrangements shall be made to do this work at the time the water meter is installed.

C. From the point of entrance of the water main into the building and on the meter side of the main inside water valve and union install a stranded copper cable #3/0 in 1-1/4" conduit to the main distribution panel. Connect the cable to the equipment ground bus.

D. Install a green equipment grounding conductor in each raceway, sized per NEC Table 250-122. Terminate on equipment ground bus within panelboard serving load.

E. Install #6 awg copper grounding conductor from ground bar in main telephone box to inter system bonding termination to grounded neutral bus in main distribution panel.

F. All separate grounding electrode conductors shall be bonded together to limit potential differences between them and between their associated wiring systems. This includes the power system, telephone system, etc.

2.03 FIELD QUALITY CONTROL
A. Inspect grounding and bonding system conductors and connections for tightness and proper installation.

SECTION C16124
SUPPORTING DEVICES AND HANGERS

PART 1 - PRODUCTS

1.01 ACCEPTABLE MANUFACTURERS
A. Supporting devices and hangers shall be manufactured by RACO Fasteners, or approved equivalent.

PART 2 - EXECUTION

2.01 INSTALLATION
A. Secure conduits to within 3' of each outlet box, junction box, cabinet, fitting, etc., and at intervals not to exceed ten feet (10') and in accordance with the National Electric Code. In seismic zones, support conduits 1" and under at 6' intervals.

B. Install clamps secured to structure for feeder and other conduits routed against the structure. Use drop rods and hangers or racks to support conduits run apart from the structure.

C. Provide and install suitable angle iron, channel iron or steel metal framing with accessories to support or brace electrical equipment including safety switches, fixtures, panelboards, etc.

D. Use of chains, perforated iron, baling wire, or tie wire for supporting conduit runs is not permitted.

E. For support of low voltage wiring not required to be in conduit, bundle cables together in a neat manner using approved nylon tie wraps. Bundled cables shall be supported with "J" hooks on telephone type bridle rings, a minimum of 6 feet on centers. Clearly identify all differing types of cables being run and tag with tape tags regarding telephone, POS System, music / communication, security, etc. for various system utilizing said cable. Identification tape shall be provided at minimum intervals of 25 feet on center and within each building space.

F. Provide a system of supporting devices and hangers to insure secure support or bracing for conduit, electrical equipment, including safety switches, fixtures, panelboards, outlet boxes, junction boxes, cabinets, etc.

SECTION C16140
WIRING DEVICES AND PLATES

PART 1 - PRODUCTS

1.01 WALL SWITCHES
A. Ratings: 20 amps, 120/277 volts a.c. or as identified on drawings.

B. Devices: (Cooper/Arrow Hart catalog numbers are listed unless noted otherwise):
1. Single pole toggle switches: 20 AMP device - #AH1221-GY (Kitchen) or #AH1221-B (Dining) 20 AMP Pilot lights illuminated with load on - #AH1221-PL

2. Double pole toggle switches: 20 AMP device - #AH1222-GY (Kitchen) or #AH1222-B (Dining)

3. Three-way toggle switches: 20 AMP device - #AH1223- GY (Kitchen) or #AH1223-B (Dining)

1.02 RECEPTACLES
A. Devices: (Cooper/Arrow Hart catalog numbers are listed unless otherwise noted):
1. Specification grade devices to be 20 amp, 125 volts, a.c. receptacles:
a. Single (simplex) device: #1877-GY (Kit) or #1877-B (Dining)
b. Duplex device: #CR20-GY (Kitchen) of #CR20-B (Dining)
c. Tamper resistant duplex device: #TRCR20-B or #TR7756-B (with USB charging)
d. GF (ground-fault circuit interrupter) duplex device: #VGF20-GY (Kitchen) or #VGF20-B (Dining)
e. IG (isolated ground) duplex device: #IG5362-RN (orange face)

B. Color:
1. Devices mounted in the FRP or tile shall be gray.
2. Devices mounted in wood finish shall be brown.
3. Isolated ground receptacles shall be orange.

1.03 SPECIAL DEVICES
A. Manual motor starter switch: SQ. D Class 2510, Type F, for use on motors up to 3/4 horsepower. Provide NEMA 1 enclosure in dry locations; provide NEMA 3R enclosure in wet or exterior locations.

1.04 WALL PLATES
A. Provide blank plates on all outlet boxes for future outlets, or outlets without devices. Plate style shall match device plates.

B. Provide non-metallic weatherproof covers for duplex GF receptacles located outside or in wet locations that feature 'while-in-use' cover equivalent to Arrow Hart #WIU-1.

C. Where devices installed in exposed boxes or conduit fittings; provide properly designed plates and covers equal to Arrow Hart RS-Series exposed work covers.

D. Install galvanized steel plates on outlet boxes and junction boxes in unfinished areas, above accessible ceilings, and on surface mounted boxes.

E. Color:
1. Wall plates mounted in FRP or tile shall be smooth satin stainless steel 302-ss series.
2. Wall plates mounted in wood finish shall be brown nylon plastic.
3. Isolated ground wall plates shall be orange nylon plastic with a circuit number printed in 3/16 inch black lettering on clear adhesive label adhered to plate.

PART 2 - EXECUTION

2.01 INSTALLATION

A. Mounting
1. Mount switches and receptacles at height above finished floor as indicated on plans, and legend.
2. Mount switches on strike side of door maximum 8" from door frame. Outlet box for switch shall be located clear of door frame. Coordinate with architectural plans prior to rough-in.
3. Install switches with off position down.
4. Do not use the feed thru feature for the GF Type receptacle, unless required by the plans.
5. Use jumbo sized plates for outlets installed in masonry walls.
6. Each receptacle shall be provided with a #12 green grounding jumper between the ground terminal of the receptacle and the outlet box.
7. The grounding conductor to each receptacle shall be installed such that the removal of the device will not interfere with the continuity of the ground.

B. Testing
1. Test each switch and verify proper operation with energized circuit.
2. Test each receptacle for proper polarity on energized circuit.
3. Test each GF receptacle with a GF receptacle tester and verify circuit is opened by GF device at milli-ampere ranges established by the manufacturer.

SECTION C16440
PANELBOARDS

PART 1 - PRODUCTS

1.01 MANUFACTURER (via Chick-fil-A National Accounts Program)
A. Square-D (for all Regions): Refer to General Sheets (G-Sheets) for Chick-fil-A National Accounts Program Contact Information.

1.02 PANELBOARD FEATURES
A. Panelboards shall have a minimum symmetrical interrupting rating to meet or exceed the available symmetrical interrupting fault current at the device intended to interrupt current.

B. Bus bars shall be copper.

C. Provide factory-installed copper ground bus in each panelboard with lugs or connectors on bar.

D. Provide electrically isolated, factory installed, neutral bus in each 3 phase, 4 wire or 1 phase 3 wire panelboard.

E. In addition to the ground bus required by paragraph 1.02D (above), provide factory installed, electrically isolated, copper ground bus in each panelboard serving isolated ground receptacles.

F. Main lugs and main circuit breaker lugs shall be UL Listed for use with both aluminum and copper conductors.

G. Provide panelboard doors with chrome-plated locks and catches. All locks shall be keyed alike. Provide two keys for each lock.

H. Provide thermal-magnetic circuit breakers which are rated for 40 degrees C ambient temperature. Breakers shall be quick-make, quick-break type trip with trip indication shown by handle position other than on or off. Multi-pole breakers shall have a common trip handle. Tandem type circuit breakers shall not be permitted.

I. MDP 100% rated main breaker, 1200 Amps or higher, shall be equipped with Arc Flash Maintenance Setting switch for use as a temporary arc-flash incident energy reduction device during maintenance activities.

J. Provide typed directory card with clear holder for each panelboard.

PART 2 - EXECUTION

2.01 INSTALLATION
A. Panelboards shall be mounted at height above finished floor such that the height of the top-most breaker in the panel is not more than 6-1/2 feet above finished floor in its highest position per the NEC.

B. Where multiple panelboards are installed on walls in common areas of buildings, the panelboards shall be installed with the top of all panelboards at the same height.

C. Provide blank filler plates over all unused spaces in panelboards.

D. A typed directory card shall indicate devices being served and the space name where the device is located.

E. Provide minimum of one (1) 3/4" empty spare conduit for every 3 poles of spare breaker or space in the panelboard. Stub conduit to nearest accessible ceiling space. Label conduit as spare at panelboard and termination point.

F. Non-isolated ground bars shall be grounded to panelboard can and main service entrance ground bus with a code sized grounding conductor installed in the same conduit as the phase and neutral conductors.

G. Circuits using a common neutral shall be installed in accordance with the National Electrical Code.

H. Inspect each panelboard for proper installation, physical damage, tightness and installation of overcurrent devices. Verify proper color coding of conductors. Correct or repair all items found in inspection.

I. Neutral wires, ground wires, and isolated ground wires shall be connected to the appropriate panel bus bar. Do not mix bus wire connections.

SECTION C16441
ENCLOSED SWITCHES
PART 1 - PRODUCTS

1.01 MANUFACTURERS
A. Square D
B. GE / ABB
C. Siemens

1.02 ENCLOSED SWITCHES
A. Nonfusible switch assemblies: NEMA KS 1, General Duty Type for 208 volt load interrupter enclosed knife switch with externally operable handle interlocked to prevent opening front cover with switch in on position. Handle lockable in off position. Provide equipment ground lug in each switch.

B. Enclosures: NEMA KS 1.
1. Interior dry locations: Type 1.
2. Exterior locations: Type 3R.

SECTION C16442
UTILITY SERVICE ENTRANCE AND DISTRIBUTION SYSTEM

PART 1 - GENERAL

1.01 SYSTEM DESCRIPTION
A. The underground electrical system service characteristics shall be 208Y/120 volts, Three Phase, Four Wire service and shall extend from utility company transformer secondary.

B. Metering of electrical usage shall be located as required by local electrical utility company. Coordinate requirements with local utility company.

C. Distribution system originates at secondary of utility transformer and includes service entrance conduit and conductors, distribution equipment, lighting panelboards, utilization equipment, overcurrent devices, disconnecting means, controls, branch and feeder circuits, etc.

PART 2 - PRODUCTS

2.01 MATERIALS
A. Furnish service entrance conduit, cable, and miscellaneous hardware as required by plans and specifications for electrical service entrance and system grounding at main electrical service.

PART 3 - EXECUTION

3.01 EXAMINATION AND PREPARATION
A. Coordinate exact locations of electrical service utility transformer, metering equipment, service lateral, etc. prior to commencement of installation. Contact engineer with conflicts prior to bid.

B. Ensure pad mounted transformer is not located within roadway or sidewalk.

C. Coordinate with local electrical utility for all utility company requirements and provide for the following items and any others required by the utility:
1. Concrete pad for utility transformer with required dimensions and details.
2. Primary underground conduit, excavation, and backfill requirements.
3. Pay for all fees associated with establishment of electrical service.
4. Furnish list of loads to the electrical utility company serving the facility.
5. Verify that utility company clearances are provided on all sides of utility equipment.

D. Ensure proper access to utility equipment is maintained.

E. Provide pull rope, excavation in accordance with electrical utility company requirements, backfill and concrete envelope for primary in accordance with electrical utility company requirements. Turn conduits up riser pole as required. Cap spare conduits 12 inches above grade with plumbers pipe cap.

F. Provide secondary lugs on utility transformer and perform drilling and installation of lugs in accordance with utility requirements. Type of lugs shall be in accordance with electrical utility company requirements. Connect service conductor to transformer secondary lugs as directed by electrical utility.

SECTION C16500
LIGHTING FIXTURES (LUMINAIRES)

PART 1 - GENERAL

1.01 ACCEPTABLE MANUFACTURERS AND VENDORS
A. Lighting fixtures indicated on lighting fixture schedule are to be purchased from the National Account Vendor. Refer to General Sheets (G-Sheets) for Chick-fil-A National Accounts Program Contact Information.

B. Lamps to be Osram-Sylvania and will typically be provided with the luminaire by the lighting manufacturer.

1.02 FIXTURE REQUIREMENTS
A. Provide regulating, HPF ballasts in all HID lighting fixtures. HID lamp types shall be as indicated on the drawings.

B. Recessed fluorescent lighting fixture ballasts shall be provided with integral thermal protection.

C. Provide energy-saving Instant or Rapid Start lamps for all fluorescent fixtures.

D. All lamps and ballasts shall meet or exceed the requirements of the National Energy Policy Act of 1992 and any other applicable Codes or Criteria.

E. All components of recessed fixtures shall be accessible without disturbing fixture in or on ceiling.

F. Energy saving ballasts and energy saving lamps provided shall be compatable for operation together.

G. Exterior fixtures and poles shall be suitable for exterior use, shall be UL Listed, and shall be a standard design for exterior application.

H. Exterior poles for fixtures with luminaires installed shall be designed for maximum constant velocity wind load with luminaires installed, applicable to the geographic area.

1.03 CONTROLS
A. Lighting contactors shall be Square-D, GE / ABB, Cutler-Hammer or Siemens of types and quantity shown on drawings, except those furnished with the switchgear as part of the National Account Program by Suncoast Environmental Controls (SEC).

1.04 EMERGENCY LIGHTING UNITS
A. Batteries shall supply emergency power for lighting with minimum operating time of 1-1/2 hours.

B. Emergency lighting shall be automatically operational upon normal utility power failure.

PART 3 - EXECUTION

3.01 INSTALLATION
A. Lighting fixtures shall be structurally supported. Fluorescent fixtures mounted in suspended ceilings shall be supported by and attached to ceiling system as required by NEC Article 410. In addition, fluorescent troffers shall be supported at two opposite corners to building structure.

B. Recessed fixtures in dropped ceiling areas shall be connected to power source using flexible conduit. Flexible conduit shall contain a separate insulated green No. 12 copper ground wire. Flexible conduit shall be connected to junction box and fixture. Green ground wire shall provide ground continuity between conduit system and fixture. Grounding conductors shall be permanently and mechanically connected between fixture and conduit system so as to be electrically continuous.

C. Fixtures surface mounted on exposed tee bar ceilings shall use grip clamps on tee bars to support fixtures.

D. Wire shall be continuous from splice in outlet box of building wiring system to lamp socket or ballast terminals.

E. Maintain the integrity of enclosures on enclosed and gasketed fixtures. Minimize the number of enclosure penetrations and make such penetrations water and dust tight with appropriate gaskets and fittings.

F. Concrete bases shall be provided for all exterior ground mounted or pole mounted fixtures.

G. Install accessories furnished with each fixture.

H. Wiring from pole bases to pole mounted luminaire shall be No. 12 with fuse protection provided by a 30 amp, 600 volt waterproof fuseholder with Bussman 'Limitron' fuse of ampere rating 3 times the load current.

I. Surface and recessed fixtures on or in plastered or drywall ceilings shall be supported by support channels. Support channels shall span across main support channels and shall not depend upon ceilings for support.

3.02 FIELD QUALITY CONTROL
A. Relamp fixtures that have failed lamps at substantial completion.

SECTION C16596
SPECIAL SYSTEMS

PART 1 - GENERAL

1.01 WORK INCLUDED
A. Furnish and install raceway system for music / communications security, CCTV, POS, and other owner-furnished systems, consisting of empty conduits, junction boxes, outlet boxes, and device plates, etc., as specified and shown on owner selected vendor wiring schematics. Cable, equipment, and installation of the interior system will be provided by the owner's system vendor.

B. Interior system equipment will be furnished by Owner's Vendor.

C. Install special backboxes furnished by Owner's Vendor. Coordinate with the Vendor for the installation. Coordinate with the Vendor if backboxes are to be contractor provided in order to provide and install the appropriate item for the Vendor.

PART 2 - PRODUCTS

2.01 MATERIALS
A. Provide 4-11/16" square boxes, with plaster rings. Provide device plates for system outlets as specified in Section 16141. Provide separate conduit to nearest accessible ceiling space from each outlet.

B. Minimum conduit size shall be 3/4".

C. Provide lightning arrester for telephone service entrance at main telephone backboard in accordance with UL96A paragraph 11.2 and NFPA 780.

D. Cable shall be in conduit where installed in walls or above inaccessible ceiling spaces.

PART 3 - EXECUTION

3.01 INSTALLATION
A. Provide one #10 equivalent nylon pull wire in each empty telephone conduit.

B. Provide trenching, backfilling, etc., for installation of service entrance conduit in accordance with other divisions, plans, and telephone utility requirements. Provide pull wire in empty conduit.

C. Coordinate with the local utility for point of service and type of service required. Pay for any utility company charges and fees for establishment of service.

D. Provide a complete raceway system in accordance with telephone utility company and interior system vendor/utility requirements. Telephone utility company and interior system vendor shall review the drawings. Contractor shall provide for any additional or varying requirements.

E. Terminate each conduit stub-up or termination with nylon insulated bushings.

F. Final connections and testing of system will be provided by the system vendor. Contractor shall contact the owner and vendor and schedule the work.

CLOSE OUT DOCUMENT REQUIREMENTS

Provide the following to the building owner upon completion of construction:

1. Submittal data stating equipment rating and selected options for each piece of equipment requiring maintenance.
2. Operation manuals and maintenance manuals for each piece of equipment requiring maintenance. Required routine maintenance actions shall be clearly identified.
3. Names and addresses of at least one qualified service agency.
4. A complete narrative of how each system is intended to operate.

Chick-fil-A
5200 Buffington Road
Atlanta, Georgia
30349-2998

Kurzynske & Associates
2705 Lebanon Pike - Suite One
Nashville, Tennessee 37214
Telephone: (615) 255-5203

ALABAMA REGISTERED PROFESSIONAL ENGINEER MARK T. KURZYNSKE No. 32714
06/21/24

CHICK-FIL-A
VALLEY, AL

3215 20TH AVENUE
VALLEY, AL 36854

FSR#05772

BUILDING TYPE / SIZE: BTS LS BP
RELEASE: 23.09
PRINTED FOR
CONSTRUCTION

REVISION SCHEDULE

NO.	DATE	DESCRIPTION

CONSULTANT PROJECT #	24035.CC.S
DATE	03/27/2024
DRAWN BY	ES

Information contained on this drawing and in all digital files produced for above named project may not be reproduced in any manner without express written or verbal consent from authorized project representatives.

SHEET
ELECTRICAL SPECIFICATIONS

SHEET NUMBER
E-002

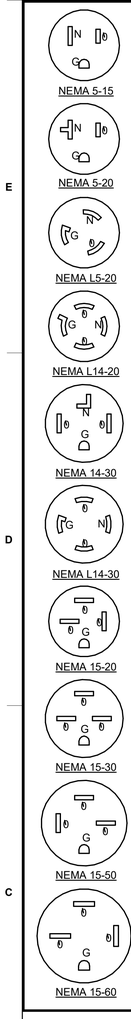

KITCHEN EQUIPMENT SCHEDULE NOTES

1. ALL SO CORD LENGTHS SHALL BE MEASURED FROM THE REAR OF THE EQUIPMENT TO THE END OF THE CORD.
2. CONTRACTOR SHALL PROVIDE GROUND-FAULT PROTECTION FOR ALL 120 VOLT 15 AMP AND 20 AMP RECEPTACLES IN THE KITCHEN / FOOD PREPARATION AREAS. GROUND-FAULT PROTECTION SHALL BE PROVIDED AT THE RECEPTACLE AS A GFCI TYPE RECEPTACLE UNLESS NOTED OTHERWISE ON THE PLANS WHERE A GFCI TYPE BREAKER IS INDICATED.
3. PROVIDE GFCI TYPE BRANCH BREAKER FOR KITCHEN / FOOD PREPARATION AREA RECEPTACLES THAT ARE TWIST-LOCK, CLOCK STYLE, OR IG (ISOLATED GROUND) TYPE.

KITCHEN EQUIPMENT SCHEDULE - CHICK-FIL-A P14 EDITION

ITEM NO.	DESCRIPTION OF EQUIPMENT	VOLTS	PH	KW	AMPS	NEMA-RATING	COMMENTS AND REMARKS
180	ORDER REGISTER	120	1		0.70	5-20P	
182	RECEIPT PRINTER	other	1		1.80	5-20P	PROVIDED BY CFA IT WITH 120V/24V POWER SUPPLY ADAPTER FOR USE WITH 120V IG OUTLET
182L	LABEL PRINTER	other	1		1.70	5-20P	PROVIDED BY CFA IT WITH 120V/24V POWER SUPPLY ADAPTER FOR USE WITH 120V IG OUTLET
183	ORDER MONITOR	120	1		0.125	5-20P	PROVIDED BY CFA IT
184	IPAD	120	1	0.120	1.00	5-20P	PROVIDED BY CONNECTION
184T	ITIMER	120	1	0.120	1.00	5-20P	PROVIDED BY CLARK
190	DRIVE-THRU VIDEO MONITOR	120	1		0.8	5-20P	
211B	FLY LIGHT (MANTIS QUALIS)	120	1	0.013	0.11	5-20P	
211C	FLY LIGHT (MANTIS SIRIUS X)	120	1	0.013	0.11	5-20P	CLOCK STYLE RECEPTACLE REQUIRED - RE: ARCHITECTURAL SHEETS FOR MOUNTING DETAILS
269	FIRE SUPPRESSION SYSTEM	120	1		VERIFY	DIRECT CONNECTION	REMOTE CABINET - REFER TO SHOP DRAWINGS - FED FROM CFA-T500 PANEL
270	FIRE SUPPRESSION SYSTEM	120	1		VERIFY	DIRECT CONNECTION	LOCATED ABOVE HOOD BEHIND CLOSURE PANEL - REFER TO SHOP DRAWINGS - FED FROM CFA-T500 PANEL
300a	MILKSHAKE BASE DISPENSER	120	1		2.00	5-15P	MOUNTED ON ITEM #300b
300X	DOUBLE BARREL ICE CREAM MACHINE	208	3		19.00/15.00	15-30P/15-20P	PROVIDED WITH HUBBELL HBL8432C & HBL8421C ANGLE PLUGS
305	TEA BREWER	120	1	1.650	13.80	5-15P	PROVIDE QUICK DISCONNECT HOSES
308	SINGLE COFFEE MAKER	208	1	4.000	19.20	L14-30P	QUICK DISCONNECT HOSES PROVIDED BY CFA WAREHOUSE
310	DOUBLE LEMONADE BUBBLER	120	1		8.50	5-15P	ORDER (1) #3CRA016 BOWL KIT AND (1) #3CRA018 BASE PER BUBBLER AND ORDER TOTAL OF (1) #3CRA021 SET OF (2) 2.4 GAL BOWLS
315W	10-HEAD BEVERAGE DISPENSER WITH ICE BIN	115	1		10.00	5-15P/5-15P	PROVIDED WITH (2) CORDS AND PLUGS PER TOWER
320	TURBO CARBONATOR	115	1		6.2	5-20P	ORDER (6) #44231, (2) #44233, (6) DR. PEPPER PUMPS, & (2) #C77004
363H	HIGH-TEMP UPRIGHT DISHWASHER	208	3		53.68	DIRECT CONNECTION	INCLUDES 6 FT BRAIDED HOSE AND INTEGRATED DRAIN WATER TEMPERING SYSTEM
380	ICE MACHINE	115	1	0.6	5	5-15P	INSTALLED ON TOP OF ICE BIN - PROVIDED WITH 6 FT CORD AND 35 FT LINE SETS
380a	ICE BIN SANITATION SYSTEM	120	1	0.0096		5-15P	INSTALLED ON WALL ABOVE ICE BIN - SHARES DUPLEX WITH (1) ICE MACHINE
380C	ICE MACHINE REMOTE CONDENSING UNIT	208	3	3.100	14.20	DIRECT CONNECTION	AIR COOLED UNIT - GC SHALL PLACE AND INSTALL CONDENSER ON ROOF - NOT SHOWN ON DRAWINGS
380CD	ICE MACHINE REMOTE CONDENSING UNIT	208	3	3.600	15.70	DIRECT CONNECTION	AIR COOLED UNIT - GC SHALL PLACE AND INSTALL CONDENSER ON ROOF - NOT SHOWN ON DRAWINGS
380D	ICE MACHINE	115	1	0.368	5.00	5-15P	INSTALLED ON TOP OF ICE BIN - PROVIDED WITH 6 FT CORD AND 35 FT LINE SETS
400L	SINGLE UPRIGHT FREEZER (30" WIDE)	115	1	1.100	9.40	5-15P	HINGE LEFT - PROVIDE FINISHED BACK - ORDER ON 4 5/8 IN CASTERS
410	WALK-IN FREEZER	120	1		3.30	DIRECT CONNECTION	ORDER WITHOUT FLOOR - REFER TO LIGHTING PLAN
410a	WALK-IN FREEZER CONDENSER	208	3		16.30	DIRECT CONNECTION	GC SHALL INSTALL CONDENSER - NOT SHOWN ON DRAWINGS - RE: MECHANICAL SHEETS FOR DETAILS
410b	WALK-IN FREEZER EVAPORATOR	208	1		1.50	DIRECT CONNECTION	POWER FED FROM CONDENSER
420	SINGLE UNDERCOUNTER REFRIGERATOR	115	1	0.564	4.70	5-20P	HINGE RIGHT - ORDER ON 4" CASTERS
420L	SINGLE UNDERCOUNTER REFRIGERATOR	115	1	0.564	4.70	5-20P	HINGE LEFT - ORDER ON 4" CASTERS
420LA	SINGLE UNDERCOUNTER REFRIGERATOR	115	1	0.564	4.70	5-20P	HINGE LEFT - ORDER ON 2 IN CASTERS
421	DOUBLE UNDERCOUNTER REFRIGERATOR	115	1	0.756	6.30	5-15P	ORDER ON 4 IN CASTERS
422T	REFRIGERATED EQUIPMENT STAND (48")	115	1	0.80	6.70	L5-15P	EC TO CHANGE PLUG TO TWIST LOCK - PROVIDED W/9' CORD - ORDER ON 4" CASTERS
431T	DOUBLE REFRIGERATED WORK TABLE	115	1	0.756	6.30	L5-15P (BY EC)	EC TO CHANGE PLUG TO TWIST LOCK - ORDER ON 6 IN CASTERS WITH BACKSPLASH TOP
432T	DOUBLE REFRIGERATED WORK TABLE	115	1	0.756	6.30	L5-20P (BY EC)	EC TO CHANGE PLUG TO TWIST LOCK - ORDER ON 6 IN CASTERS WITH BACKSPLASH TOP
439L	40" COLD RAIL	115	1	0.800	7.10	5-15P	COMPRESSOR ON LEFT - SUPPLIED WITH 9 FT CORD AND PLUG
440CT	ICE BATH BREADING TABLE	120	1		1.00	L5-15P (BY EC)	EC TO CHANGE PLUG TO TWIST LOCK - 10 FT CORD AND PLUG - LEAF INCLUDED WITH TABLE - INSTALL IF SHOWN ON PLANS
441	SALAD PREP TABLE	115	1		9.0	L5-15P	PROVIDE WITH TWIST LOCK PLUG; ORDER ON 4" CASTERS WITH PAN PKG.; SESC TO PROVIDE PAN PKG.
442WCLT	SINGLE UPRIGHT REFRIGERATOR (30" WIDE)	115	1		7	L5-15P (BY EC)	HINGE LEFT - PROVIDE FINISHED BACK - ORDER ON 6 IN CASTERS - EC TO CHANGE PLUG TO TWIST LOCK
443GLT	SINGLE UPRIGHT REFRIGERATOR (24" WIDE)	115	1		8.00	L5-15P (BY EC)	HINGE LEFT - HALF HEIGHT GLASS DOORS - PROVIDE FINISHED BACK - ORDER ON 6 IN CASTERS - EC TO CHANGE PLUG TO TWIST LOCK
444D	DOUBLE THAWING CABINET (52" WIDE)	115	1		16.00	DIRECT CONNECTION	HINGE STANDARD - GC TO INSTALL LIQUID TIGHT FLEX CONDUIT - ORDER ON 6 IN CASTERS
444S	SINGLE THAWING CABINET (32" WIDE)	115	1		16.00	DIRECT CONNECTION	HINGE RIGHT - GC TO INSTALL LIQUID TIGHT FLEX CONDUIT - ORDER ON 6 IN CASTERS
449	WALK-IN COOLER	120	1		2.40	DIRECT CONNECTION	ORDER WITHOUT FLOOR - REFER TO LIGHTING PLAN
449a	WALK-IN COOLER CONDENSER	208	3		9.50	DIRECT CONNECTION	GC SHALL INSTALL CONDENSER - NOT SHOWN ON DRAWINGS - RE: MECHANICAL SHEETS FOR DETAILS
449b	WALK-IN COOLER EVAPORATOR	208	1	0.110	1.00	DIRECT CONNECTION	POWER FED FROM CONDENSER
500A	VERTICAL CONTACT TOASTER	120	1	1.80	15.00	5-15P	
500B	RADIANT TOASTER	208	1	5.50	24.00	L6-30P	PROVIDED WITH TWIST LOCK PLUG
503T	EGG STATION	208	1	2.5	12.5	L6-20P	PROVIDED W/TWIST LOCK PLUG
505VLT	VECTOR OVEN	208	3	7.90	22.00	L15-30P (BY EC)	HINGE LEFT - EC TO CHANGE PLUG TO TWIST LOCK
522	SINGLE OPEN FRYER	208	3	22.000	62.00	PIN & SLEEVE	PIN & SLEEVE PROVIDED WITH EQUIPMENT AND RECEPTACLE BOX PROVIDED WITH HALTON ITEMS - (1) POWER CONNECTION PER WELL
522A	DOUBLE OPEN FRYER	208	3	22/22	62/62	PIN & SLEEVE	PIN & SLEEVE PROVIDED WITH EQUIPMENT AND RECEPTACLE BOX PROVIDED WITH HALTON ITEMS - (1) POWER CONNECTION PER WELL
523	PRESSURE FRYER	208	3	13.500	38.00	15-50P	PROVIDED WITH 6 FT CORD AND PLUG
524	DUAL SIDE CLAMSHELL GRILL	208	3	3.3	24.1/28.2/23.1	15-50P	PROVIDED WITH 5' CORD & PLUG
560	FRY HOLDING STATION	120	1	1.900	15.40	DIRECT CONNECTION	
562A	HIGH DENSITY HOT HOLDING TOWER	120	1	1.80	16.00	5-20P	PROVIDED WITH 8 FT CORD AND PLUG
563D	DOUBLE TIER SANDWICH SLIDE	120	1	1.09	9.13	5-15P	CORD EXITS RIGHT - 6' CORD AND PLUG
563SL	SINGLE TIER SANDWICH SLIDE	120	1	0.548	4.56	5-15P	CORD EXITS LEFT - 6' CORD AND PLUG
564BD	VISUAL HOT HOLDING CABINET (2x2 LANDSCAPE)	120	1	0.660	5.50	5-15P	DUAL-SIDED DISPLAY - ORDER WITH LIDS/TRAY SEALS, AMBER PANS, AND FALSE BOTTOMS
565C	FOOD WARMER	115	1	1.200	12.50	5-15P	ORDER WITH (1) 3VOL042, (2) 3VOL043, (8) 3VOL051, AND (8) 3VOL061
580H	VISUAL HOT HOLDING CABINET (5x2)	120	1	1.920	16.00	5-20P	ORDER WITH LIDS/TRAY SEALS
592	RETHERMALIZER	208	3	8.000	22.00	15-30P	PROVIDED WITH 6' CORD AND ANGLE PLUG - WATER SUPPLY TO BE S/S BRAIDED HOSE WITH MALE QUICK CONNECT ADAPTER
600T	MIXER	120	1		8.00	L5-20P (BY EC)	EC TO CHANGE PLUG TO TWIST LOCK - ORDER WITH (1) 3HOB405, (1) 3HOB061, (2) 3HOB318, (2) 3HOB319, AND (1) 3HOB058
607	COUNTERTOP LEMON JUICER	115	1			5-15P	
669	OFFICE SAFE	120	1				INSTALL SAFE PER MANUFACTURE'S WRITTEN INSTRUCTIONS
672	DIGITAL MENU BOARD	120	1			5-15P	PROVIDED BY COATES

Chick-fil-A
5200 Buffington Road
Atlanta, Georgia
30349-2998

Kurzynske & Associates
2705 Lebanon Pike - Suite One
Nashville, Tennessee 37214
Telephone: (615) 255-5203

ALABAMA REGISTERED PROFESSIONAL ENGINEER MARK T. KURZYNSKE
06/21/24

CHICK-FIL-A
VALLEY, AL

3215 20TH AVENUE
VALLEY, AL 36854

FSR#05772

BUILDING TYPE / SIZE: BTS LS BP
RELEASE: 23.09
PRINTED FOR
CONSTRUCTION

REVISION SCHEDULE

NO.	DATE	DESCRIPTION

CONSULTANT PROJECT # 24035.CC.S
DATE 03/27/2024
DRAWN BY ES

Information contained on this drawing and in all digital files produced for above named project may not be reproduced in any manner without express written or verbal consent from authorized project representatives.

SHEET
EQUIPMENT SCHEDULE

SHEET NUMBER
E-601

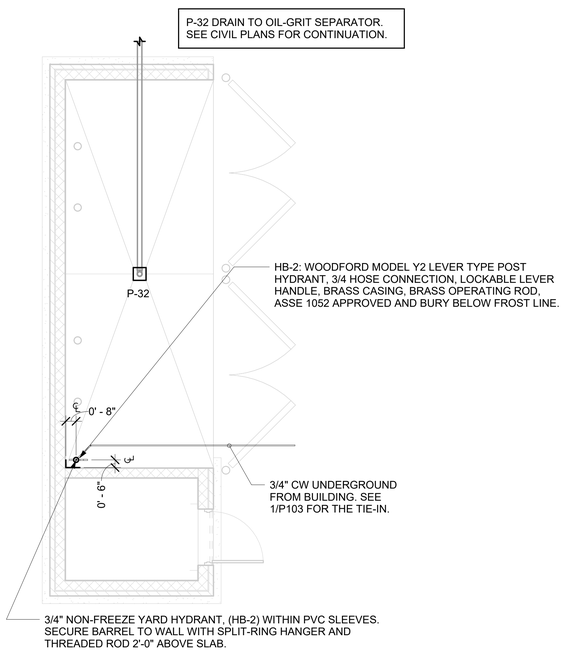

2 REFUSE PAD PLUMBING PLAN
1/4" = 1'-0"

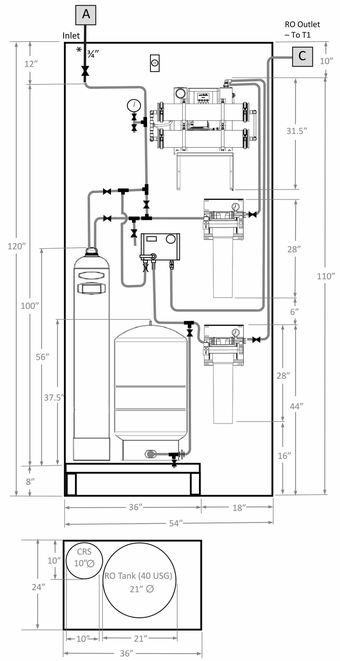

CFA – Type C – Ice RO

KineticoPRO

3 KINETICO INSTALLATION DRAWINGS
NOT TO SCALE

KEY NOTES

1 1" DIAMETER PVC DRAIN FROM BACKFLOW PREVENTER PANEL. CONNECT 1" PVC TO FACTORY PROVIDED COUPLING MOUNTED ON BACK PANEL. ROUTE TO DRAIN AT END OF BAG-N-BOX. MOUNT PIPING TIGHT TO WALL WITH STRUT AND CLAMP.
5 1/2" HW AND CW DROPS TO MOP SINK FAUCET. INSTALL SHUT OFF AND CHECK VALVE IN HOT AND COLD WATER PIPES ABOVE CEILING. SEE WATER DISTRIBUTION ISOMETRIC.
6 1/2" HW AND CW DROPS TO P-16 WALL FAUCET WITH VACUUM BREAKER FOR DEDICATED CONNECTION TO ECOLAB DETERGENT DISPENSER. MOUNT AS SHOWN ON K-SHEETS. PROVIDE BALL VALVES IN SUPPLY ABOVE CEILING.
8 1/2" FW FOR TWO TEA BREWERS AND ONE COFFEE MAKER. SEE DETAILS SHEET FOR MORE INFORMATION.
13 3/4" FW DOWN. SEE KITCHEN DRAWINGS FOR LOCATION. PIPE 1/2" FW TO EACH FAUCET INLET WITH 6" SPREAD. PROVIDE BALL VALVE ABOVE CEILING. SEE WATER DISTRIBUTION ISOMETRIC.
26 FW AND FW2 FROM WATER FILTERS. SEE DETAIL SHEET FOR MORE INFORMATION.
27 1/2" CW DOWN TO RETHERMALIZER.
33 OWNER FURNISHED, PLUMBER INSTALLED STOP/BFP PANEL. SEE KITCHEN DRAWINGS FOR LOCATION AND ELEVATION. PROVIDE EXPOSED 3/4" BALL VALVE AT CONNECTION TO PANEL. ROUTE 1" PVC DRAIN FROM FACTORY PANEL DRAIN CONNECTION TO DRAIN AT END OF BEVERAGE RACK AND TERMINATE WITH ELBOW AND AIR GAP.
34 OWNER FURNISHED, PLUMBER INSTALLED WATER FILTERS. SEE DETAIL SHEET FOR MORE INFORMATION.
35 HOSE BIBB 24" ABOVE EXTERIOR GRADE. VERIIFY WALL THICKNESS AT EXTERIOR HOSE BIBB PRIOR TO ORDERING (TYP).
66 FIRE SPRINKLER RISER SHOWN FOR REFERENCE ONLY.
72 3/4" FW DOWN TO STOP(S) AT ICE MAKER(S). SEE DETAIL SHEET FOR MORE INFORMATION.
73 1/2" TEPID WATER TO EYEWASH #360E.
97 SEE CIVIL DRAWINGS FOR CONTINUATION.

WATER FILTRATION SYSTEM NOTES:

1. PLUMBING CONTRACTOR IS RESPONSIBLE FOR 3/4" CAPPED WATER LINE FOR RO SYSTEM. SEE DETAIL #7 BELOW.
2. PLUMBING CONTRACTOR IS RESPONSIBLE FOR WATER FILTER CONNECTIONS FROM PROTOTYPICAL T1 FILTRATION SYSTEM (#350). SEE DETAIL #5 THIS SHEET.
3. PLUMBING CONTRACTOR SHALL REVIEW *DESIGNOTE 2020-017* AND *SYSTEMS TYPE GUIDE* DEVELOPED BY CFA & KINETICO.

2

COORDINATE WITH KINETICO & CORRESPONDING SHOP DRAWINGS FOR TYPE C FILTRATION SYSTEM COMPONENTS AND CONNECTIONS. SEE DETAIL THIS SHEET.

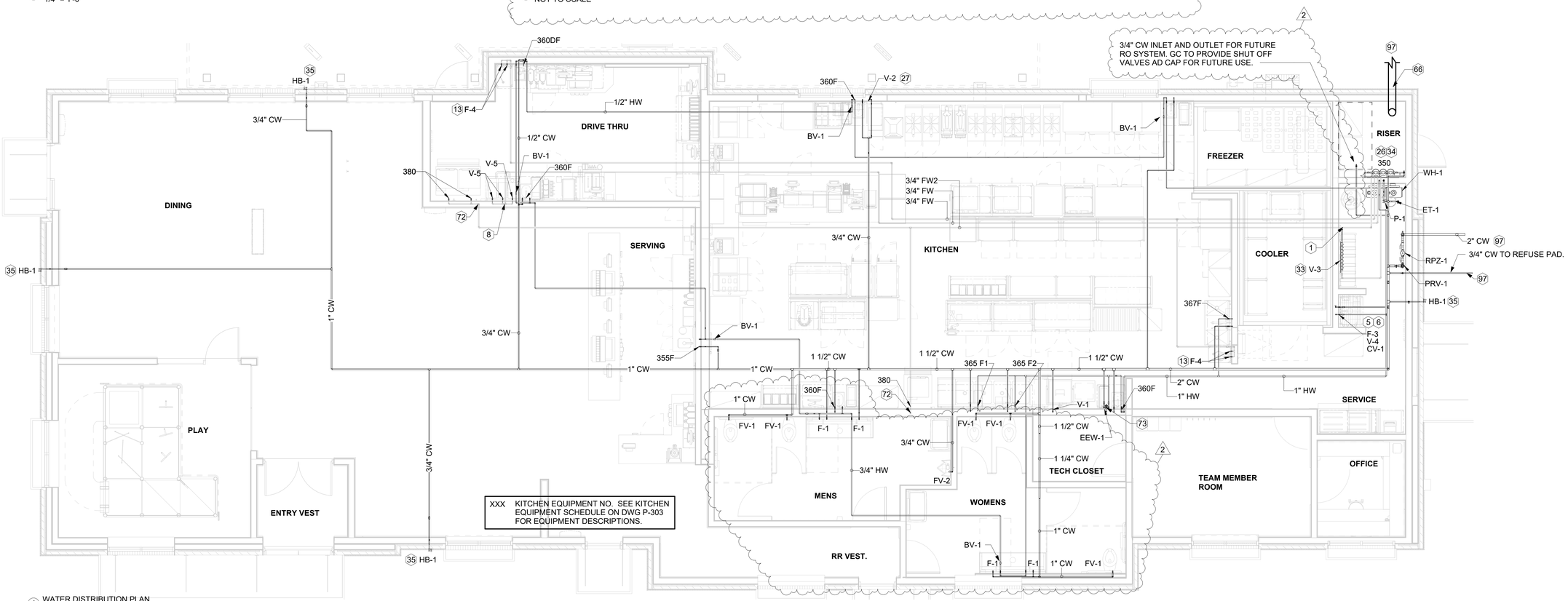

1 WATER DISTRIBUTION PLAN
1/4" = 1'-0"

Chick-fil-A
5200 Buffington Road
Atlanta, Georgia
30349-2998

Kurzynske & Associates
2705 Lebanon Pike - Suite One
Nashville, Tennessee 37214
Telephone: (615) 255-5203

ALABAMA REGISTERED PROFESSIONAL ENGINEER MARK T. KURZYNSKE NO. 20174
06/21/24

CHICK-FIL-A
VALLEY, AL

3215 20th Avenue
VALLEY, AL 36854

FSR#05772

BUILDING TYPE / SIZE: BTS LS BP
RELEASE: 23.09
PRINTED FOR
CONSTRUCTION

REVISION SCHEDULE

NO.	DATE	DESCRIPTION
2	06/21/2024	Construction Set

CONSULTANT PROJECT #	24035.CC.S
DATE	03/20/2024
DRAWN BY	CH

Information contained on this drawing and in all digital files produced for above named project may not be reproduced in any manner without express written or verbal consent from authorized project representatives.

SHEET
WATER DISTRIBUTION PLAN

SHEET NUMBER
P-103

6/21/2024 10:21:32 AM Autodesk Docs://AL_05772_Valley_2024.2_BTS/05772_Valley_PLB.rvt
40-LS-05772-P-103-WATER DISTRIBUTION PLAN