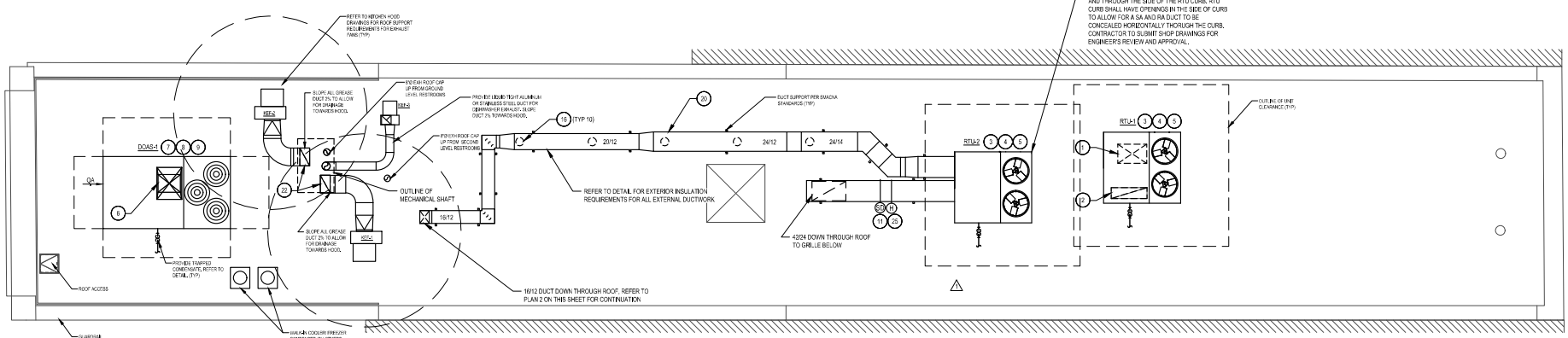

3	ROOF MECHANICAL PLAN
M101	SCALE: 3/16" = 1'-0"

1 TRANSITION LINED OPENING. CONNEC CONNECTION BELO DOUBLE THICKNES REFER TO RTU SEC

2 TRANSITION LINED OPENING. CONNEC CONNECTION BELO DOUBLE THICKNES REFER TO RTU SEC

3 ROOFTOP UNIT, MO W/ROOF STRUCTUR BY LANDLORD.

4 PROVIDE TRAPPED EXTEND TO NEARES

5 PROVIDE GAS CON AND DIRT LEG. REF

6 26/22 LINED SUPPLY SIDE OF UNIT SUPP DECK. PROVIDE RE TURNING VANES IN

7 DOAS UNIT, MOUNT W/ROOF STRUCTUR

8 PROVIDE TRAPPED NEAREST ROOF DR

9 PROVIDE GAS CON DIRT LEG. REFER T

10 TRANSITION FROM PROPORTIONAL SP TO HORIZONTAL W

11 SMOKE DETECTOR PROVIDED AND WIR MECHANICAL CONT TO PROVIDE 24/24 ACCESS PANEL MA LAY-IN DIFFUSER, C

12 TRANSITION FROM GRILLE IN CEILING. CONSTRUCTION AT

13 WALL MOUNTED TE LOCATION WITH FU

14 10"Ø EXHAUST DUC ALUMINUM OR STA SLOPE DUCT 2% TO

15 8"Ø TOILET EXHAUS

16 10"Ø SUPPLY DUCT CONNECTION, EXTE ADJACENT SUPPLY

17 TIGHT ALUMINUM D ROUTE WITHIN SHA EXHAUST FAN. SLO

18 WALL MOUNTED SE LOCATION WITH FU

19 26/20 OUTSIDE AIR PROPORTIONAL SP TO HORIZONTAL W

20 PROVIDE BOTTOM HORIZONTAL WITH OF SKYLIGHT WELL ROOF WITH GENER

21 COORDINATE WITH DOOR BY 3/4".

22 22/12 GREASE EXH SHAFT TO ROOF. T EXHAUST FAN. PRO TO DETAIL TO ADD

23 PROVIDE OPENING PROVIDE GRILLE O

24 PROVIDE OPENING GRILLE ON BOTH SI

25 DUCT MOUNTED HU REQUIREMENTS W FOR MORE INFORM

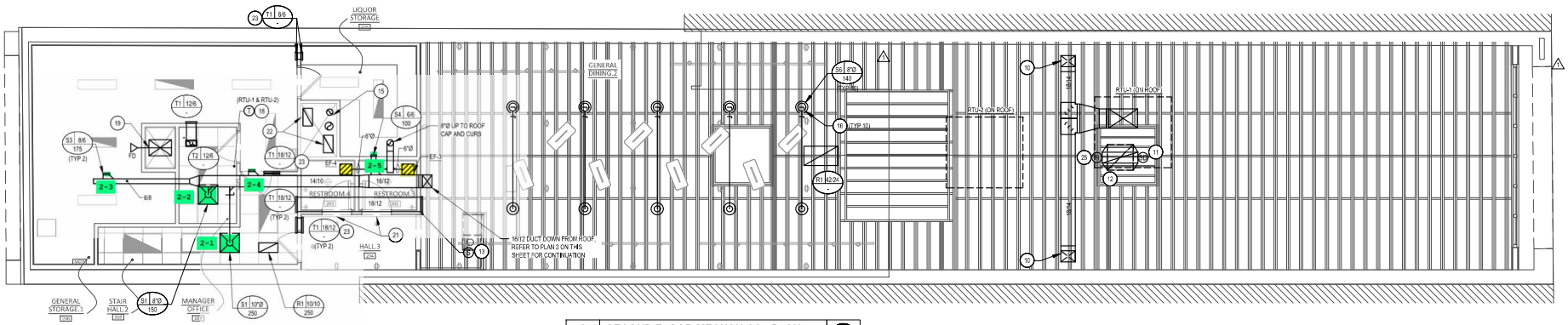

2	SECOND FLOOR MECHANICAL PLAN
M101	SCALE: 3/16" = 1'-0"

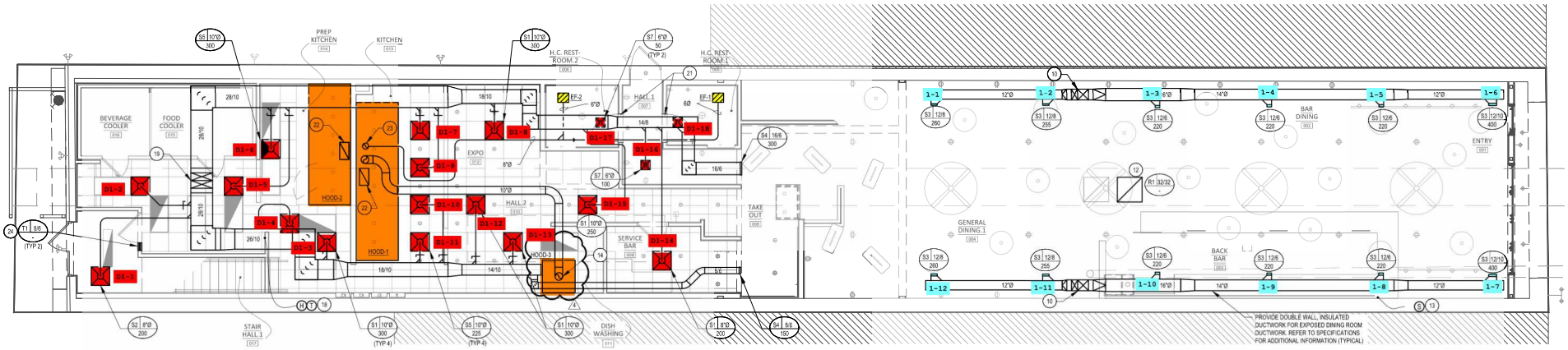

1	GROUND FLOOR MECHANICAL PLAN
M101	SCALE: 3/16" = 1'-0"