SECTION 15732 - PACKAGED ROOFTOP AIR-CONDITIONING UNITS

PART 1 - GENERAL

1.1 SECTION REQUIREMENTS

A. Submittals: Product Data and Shop Drawings.
B. Comply with ASHRAE 15.
C. EER: Equal to or greater than prescribed by the energy code adopted by the Authority Having Jurisdiction.
D. Warranties: Submit a written warranty, signed by the manufacturer, agreeing to the repair or replacement of components that fail within 5 years of Substantial Completion.

PART 2 - PRODUCTS

2.1 PACKAGED UNITS, 5 TO 20 TONS

A. Factory assembled and tested, consisting of compressors, condensers, evaporator coils, condenser and evaporator fans, refrigeration and temperature controls, filters, and dampers.
   1. Refer to Rooftop Heating/Cooling Unit Schedule on drawing M600 for capacities, and manufacturers.
   2. Evaporator Fans: Belt or direct driven, forward curved centrifugal.
   3. Exhaust/Relief Fans: Direct drive, forward curved centrifugal or propeller.
   4. Condenser Fans: Direct drive propeller.
   5. Refrigerant Coils: Aluminum fins and copper coil.
   6. Compressors: Serviceable hermetic or fully hermetic, with safety controls, hot gas bypass, and timed off controls.
   7. Heat Exchangers: Gas fired, with gas controls, electronic ignition, high limit cutout, and forced draft proving switch.
   8. Economizer controls (Comparative Enthalpy, 100% capacity).
   9. Smoke Detectors: Photoelectric in supply and/or return as called for in schedule on sheet M600.
   10. Operating Controls: Two stage heating and two stage cooling on units 7-1/2 tons and over.
   11. Roof curb.
   12. Control Wiring from T-stat to rooftop unit: Shall be 18ga / 7 conductor, rated for plenum applications.
   13. Control Wiring from T-stat to remote sensor: Shall be a separate 18ga / 2 conductor shielded, rated for plenum applications.

PART 3 - EXECUTION

3.1 INSTALLATION

A. Install units level and plumb and firmly anchored.
B. Connect gas piping to burner with pipe same size as gas train inlet, and provide union with sufficient clearance for burner removal and service.
C. Install ducts to termination in roof mounting frames. Terminate ducts through roof structure.
D. Connect units to wiring systems and to ground.

END OF SECTION 15732

SECTION 15810 - DUCTS AND ACCESSORIES

PART 1 - GENERAL

1.1 SECTION REQUIREMENTS

A. Submittals: Product Data for fire and smoke dampers.
B. Comply with NFPA 90A for systems serving spaces more than 25,000 cu. ft. in volume or building Types II, IV, and V construction more than 3 stories in height.
C. Comply with NFPA 90B for systems serving spaces in 1 or 2 family dwellings or serving spaces less than 25,000 cu. ft..
D. Comply with NFPA 96, "Ventilation Control and Fire Protection of Commercial Cooking Operations," for kitchen hood ducts.
E. Comply with UL 181 and UL 181A for ducts and closures.
F. Testing, Adjusting, and Balancing Agency Qualifications: AABC certified (to be furnished by Tenant).

PART 2 - PRODUCTS

2.1 DUCTS

A. Spiral Duct: Spiral Lock Seam, without insulation, G90 galvanized finish, ASTM A-653/924
   1. Basis of Design Manufacturers: Lindab SPIROsafe, alternates to the basis of design must be submitted for review.
   2. Fittings: Factory produced standing seam construction with internal sealing. Fittings with a major axis of 36" or smaller shall be 20 gauge. Fittings with a major axis of 37"-48" shall be 18 gauge.
B. Galvanized Steel Sheet: Forming steel, ASTM A 653/653M, G90 coating designation.
C. Duct Liner: ASTM C 1071, Type II, with an airstream surface coated with a temperature resistant coating. Thickness: 1-1/2 inch. R-value : 8.
   1. Adhesive: ASTM C 916, Type I.
   2. Mechanical Fasteners: Galvanized steel pin, length as required to penetrate liner plus a 1/8 inch projection maximum into the airstream.
D. Joint and Seam Tape: Comply with UL 181A.
E. Joint and Seam Sealant: Comply with UL 181A.
F. Rectangular Metal Duct Fabrication: Comply with SMACNA's "HVAC Duct Construction Standard" for metal thickness, reinforcing types and intervals, tie rod applications, and joint types and intervals.

2.2 ACCESSORIES

A. Volume-Control Dampers: Factory fabricated volume control dampers, complete with required hardware and accessories. Single blade and multiple opposed blade, standard leakage rating, and suitable for horizontal or vertical applications.
B. Fire Dampers: Factory-fabricated fire dampers, complete with required hardware and accessories. UL labeled according to UL 555, "Fire Dampers".
C. Flexible Connectors: Flame retardant or noncombustible fabrics, coatings, and adhesives complying with UL 181, Class 1.
D. Flexible Ducts: Factory fabricated, insulated, round duct, with an outer jacket enclosing 2 inch thick, glass fiber insulation, R-value: 6.0, around a continuous inner liner.

PART 3 - EXECUTION

3.1 INSTALLATION

A. Duct System Pressure Class: Construct and install each duct system with 2 inch positive and negative duct pressure classifications.
B. Conceal ducts from view in finished and occupied spaces. Except where noted as exposed.
C. Avoid passing through electrical equipment spaces and enclosures.
D. Support and connect metal ducts according to SMACNA's "HVAC Duct Construction Standard".
E. Install duct accessories according to applicable portions of details of construction as shown in SMACNA standards.
F. Install liner and/or insulation on ductwork per the material schedule on sheet M010.
G. Install volume control dampers in lined duct with methods to avoid damage to liner and to avoid erosion of duct liner.
H. Install fire and smoke dampers according to manufacturer's UL approved written instructions.
I. Install fusible links in fire dampers.
J. Provide saddle taps at tees for exposed ductwork.

3.2 TESTING, ADJUSTING, AND BALANCING

A. The Tenant will supply an independent balance agent to to balance and adjust the HVAC installation. The balance agent will be responsible for any pulley or belt changes required.
B. The GC is to have trained staffed available during the balancing to correct issues noted by the balance agent.
C. The balance agent is to balance airflow within distribution systems, including submains, branches, and terminals to indicated quantities +/- 10%. The hood exhaust system shall be balanced to a tolerance of -0+10% and the make-up air system to a tolerance of -10+0%.
D. The balance agent is to supply a copy of the balance report to the Tenant, engineer and general contractor for review.

END OF SECTION 15810

SECTION 15855 - DIFFUSERS, REGISTERS, AND GRILLES

PART 1 - GENERAL

1.1 SECTION REQUIREMENTS

A. Submittals: None.

PART 2 - PRODUCTS

2.1 OUTLETS AND INLETS

A. All air terminal devices:
   1. Refer to Grills, Registers, and Diffusers Schedule for equipment schedule
   2. Manufacturer: As scheduled (NO SUBSTITUTIONS)
   3. Material: As scheduled.
   4. Finish: As scheduled.
   5. Mounting: As scheduled.

PART 3 - EXECUTION

3.1 INSTALLATION

A. Coordinate location and installation with duct installation and installation of other ceiling and wall mounted items.
B. Locate ceiling diffusers, registers, and grilles, as indicated on the architectural "reflected ceiling plans." Unless otherwise indicated, locate units in center of acoustical ceiling panels.

END OF SECTION 15855

HVAC GENERAL NOTES

A GENERAL NOTES APPLY TO HVAC SHEETS.

B WORK SHALL COMPLY WITH STATE AND LOCAL CODE REQUIREMENTS AS APPROVED AND AMENDED BY THE AUTHORITY HAVING JURISDICTION, INCLUDING APPLICABLE SECTIONS OF NFPA, THE MECHANICAL CODE, AND ANY INTERIM AMENDMENTS AT THE TIME OF THE PROPOSAL. PURCHASE PERMITS ASSOCIATED WITH THE WORK. OBTAIN INSPECTIONS REQUIRED BY CODE. SEE ARCHITECTURAL SHEETS FOR THE PREVAILING CODES.

C CONTRACTOR AND SUBCONTRACTORS SHALL REVIEW A COMPLETE SET OF THE CONSTRUCTION DOCUMENTS.

D COORDINATE WORK WITH THE WORK OF OTHER TRADES, EQUIPMENT FURNISHED BY OTHERS, REQUIREMENTS OF THE OWNER, AND OF THE EXISTING CONDITIONS AT THE PROJECT SITE.

E DRAWINGS FOR THE MECHANICAL WORK ARE DIAGRAMMATIC, SHOWING THE GENERAL LOCATION, TYPE, LAYOUT, AND EQUIPMENT REQUIRED. THE DRAWING SHALL NOT BE SCALED FOR EXACT MEASUREMENTS, REFER TO ARCHITECTURAL DRAWINGS FOR DIMENSIONS. REFER TO MANUFACTURER'S STANDARD INSTALLATION DRAWINGS FOR EQUIPMENT CONNECTIONS AND INSTALLATION REQUIREMENTS. PROVIDE DUCTWORK, CONNECTIONS, OFFSETS, ACCESSORIES, AND MATERIALS NECESSARY FOR A COMPLETE SYSTEM.

F DUCT DIMENSIONS ON PLANS INDICATE DIMENSIONS OF INTERNAL FREE AREA.

G PERFORATED CEILING DIFFUSERS SHALL BE 4-WAY UNLESS NOTED OTHERWISE.

H COORDINATE ROOF WORK WITH THE OWNER'S CONSTRUCTION MANAGER PRIOR TO CONSTRUCTION.

I UNLESS NOTED OTHERWISE RECTANGULAR DUCT ELBOWS GREATER THAN 45° SHALL BE MITERED ELBOWS WITH DOUBLE-THICKNESS TURNING VANES AND RECTANGULAR DUCT ELBOWS 45° OR LESS SHALL BE RADIUSED ELBOWS WITH AN INSIDE RADIUS OF AT LEAST 1/2 THE WIDTH OF THE DUCT.

J REPLACE AIR FILTERS WITH NEW, CLEAN MERV 8 AIR FILTERS AT TURNOVER.

K THE TERM "FURNISH" MEANS SUPPLY AND DELIVER TO THE PROJECT SITE, READY FOR UNLOADING, UNPACKING, ASSEMBLY, INSTALLATION, AND SIMILAR OPERATIONS. THE TERM "INSTALL" DESCRIBES THE OPERATIONS AT THE PROJECT SITE INCLUDING THE ACTUAL UNLOADING, UNPACKING, ASSEMBLY, ERECTING, PLACING, ANCHORING, APPLYING, WORKING TO DIMENSION, FINISHING, CURING, PROTECTING, CLEANING, AND SIMILAR OPERATIONS. THE TERM "PROVIDE" MEANS TO FURNISH AND INSTALL, COMPLETE AND READY FOR THE INTENDED USE.

L PROVIDE LABELING CALLED FOR IN THE HVAC DRAWINGS USING ENGRAVED PHENOLIC PLATES.

M PROVIDE P3000 12 GA. UNISTRUT WITH PG FINISH FOR DUCT SUPPORTS AND OTHER UNISTRUT IN AREAS EXPOSED TO VIEW. SLOTTED UNISTRUT AND OTHER UNISTRUT WITH HOLES IS NOT ACCEPTABLE.

HVAC MATERIAL SCHEDULE

	APPLICATION	ALLOWABLE MATERIAL
DUCT		
	CONCEALED, GENERAL EXHAUST	RECT. OR ROUND AS SHOWN
	CONCEALED, RETURN	RECT. OR ROUND AS SHOWN, LINED OR INSULATED
	CONCEALED, SUPPLY	RECT. OR ROUND AS SHOWN, LINED OR INSULATED
	CONCEALED, TYPE I HOOD EXHAUST	RECTANGULAR 16 GA. BLACK IRON W/ WRAP OR UL 1978 FACTORY-MANUFACTURED DUCT W/ WRAP (SUBMIT SHOP DRAWINGS FOR FACTORY-MANUFACTURED DUCT PRIOR TO ORDERING FOR APPROVAL)
	EXPOSED GENERAL EXHAUST	RECTANGULAR, NO EXPOSED DUCT-SEALING MASTIC
	EXPOSED RETURN	RECTANGULAR, NO EXPOSED DUCT-SEALING MASTIC
	EXPOSED SUPPLY	RECT. LINED OR ROUND AS SHOWN, NO EXPOSED DUCT-SEALING MASTIC

HVAC ABBREVIATIONS

(E)	EXISTING
ABV	ABOVE
ADA	AMERICANS WITH DISABILITIES ACT
AFF	ABOVE FINISHED FLOOR
AFG	ABOVE FINISHED GRADE
AHJ	AUTHORITY HAVING JURISDICTION
BFF	BELOW FINISHED FLOOR
BFG	BELOW FINISHED GRADE
BOH	BACK OF HOUSE
CLG	CEILING
CTE	CONNECT TO EXISTING
DN	DOWN
EXT'G	EXISTING
FLR	FLOOR
FOH	FRONT OF HOUSE
GYP	GYPSUM BOARD
NTS	NOT TO SCALE
O/H	OVERHEAD
OBD	OPPOSED BLADE DAMPER
TYP	TYPICAL
U/G	UNDERGROUND
UNO	UNLESS NOTED OTHERWISE
VFD	VARIABLE FREQUENCY DRIVE
VSC	VARIABLE SPEED CONTROLLER
W/	WITH
WIC	WALK-IN COOLER
C02AS	TENANT'S CO2 ALARM SUPPLIER
GC	GENERAL CONTRACTOR
HES	TENANT'S HVAC EQUIPMENT SUPPLIER
HS	TENANT'S HOOD SUPPLIER
KES	TENANT'S KITCHEN EQUIPMENT SUPPLIER
LL	LANDLORD
TAB	TENANT'S TEST AND BALANCE VENDOR
TCC	TENANT'S CABLING CONTRACTOR
TDC	TENANT'S DUCT CLEANER
TEMS	TENANT'S ENERGY MANAGEMENT SYSTEM SUPPLIER
TLS	TENANT'S LIGHT/LAMP SUPPLIER
TMB	TENANT'S MENU BOARD SUPPLIER
TMS	TENANT'S MILLWORK SUPPLIER
TP	TENANT'S PHONE SUPPLIER
TRS	TENANT'S RAILING SUPPLIER
TSV	TENANT'S SIGN VENDOR
TUV	TENANT'S UV SNAITIZER SUPPLIER
WCS	TENANT'S WALK-IN COOLER SUPPLIER
WHS	TENANT'S WATER HEATER SUPPLIER

HVAC SYMBOLS

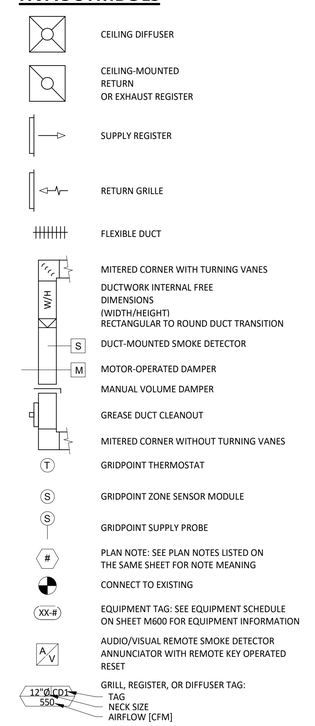

Consultant:

GPD GROUP
Professional Corporation
520 South Main Street, Suite 2531
Akron, Ohio 44311
Ph: 330.572.2100 F: 330.572.2101

COPYRIGHT 2021
THIS DRAWING IS AN INSTRUMENT OF SERVICE AND AS SUCH REMAINS THE PROPERTY OF CHIPOTLE MEXICAN GRILL, INC.. PERMISSION FOR USE OF THIS DOCUMENT IS LIMITED AND CAN BE EXTENDED ONLY BY WRITTEN AGREEMENT WITH CHIPOTLE MEXICAN GRILL, INC..

CHIPOTLE MEXICAN GRILL, INC.
PO BOX 182566
COLUMBUS, OH 43218-2566
TELEPHONE: 614.318.2400
INTERNET: WWW.CHIPOTLE.COM

STORE NO.: 4253

WINDY HILL
2675 WINDY HILL ROAD
MARIETTA, GA 30067

Issue Record:

Revisions:

Drawn: MPC

Checked: MPC

Project No. 2021201.13

Contents:

HVAC SPECIFICATIONS

M010

HVAC PLAN NOTES

1. SEE ARCHITECTURAL REFLECTED CEILING PLAN FOR CEILING MOUNTED EQUIPMENT LOCATION. TYPICAL.
2. 20/12 SUPPLY AND RETURN DUCT TO AIR HANDLING UNIT, TYPICAL.
3. ROUTE 10" OUTSIDE AIR DUCT AND CONNECT TO RETURN WITH MOTORIZED DAMPER, DAMPER SHALL BE CLOSED DURING UNOCCUPIED HOURS.
4. 3" COMBUSTION AIR AND FLUE PIPING UP THROUGH ROOF TO CONCENTRIC TERMINATION KIT. SEE ROOF PLAN FOR TERMINATION LOCATIONS.
5. 16/16 DUCT UP THROUGH ROOF. TRANSITION TO MAU-1 SUPPLY CONNECTION IN ROOF CURB.
6. 10/15 DUCTS UP FROM HOOD TO 20/15 DUCT THROUGH ROOF TO EF-1 COMPLIANT WITH NFPA 96. PROVIDE RADIUSED ELBOWS WITH AN INSIDE RADIUS OF 0.5W AT ELBOWS IN GREASE DUCT.
7. 8/6 DUCT UP THROUGH ROOF TO EF-2.
8. 24/10 DUCT DOWN TO MAKEUP AIR PSP DUCT CONNECTION. TRANSITION TO SUPPLY PLENUM OPENING SIZE. TYPICAL FOR 4.
9. 8" DIA. DUCT DOWN TO AC PSP DUCT CONNECTION. TRANSITION TO SUPPLY PLENUM OPENING SIZE. TYPICAL. CAP UNUSED DUCT CONNECTIONS.
10. INSTALL GRIDPOINT THERMOSTATS FURNISHED BY TEMS FOR RTU-1 AND RTU-2 AT THIS LOCATION AT 48" AFF. COORDINATE WITH ELECTRICAL SWITCHING IN THIS AREA. PROVIDE WIRING AS SHOWN IN DETAIL 8/E710.
11. INSTALL GRIDPOINT ZONE SENSOR MODULE FURNISHED BY TEMS FOR ITS RESPECTIVE AHU AT THIS LOCATION 60" AFF DIRECTLY TO WALL (NO JUNCTION BOX). COORDINATE LOCATION WITH EQUIPMENT. PROVIDE WIRING AS SHOWN IN DETAIL 8/E710.
12. INSTALL GRIDPOINT SUPPLY PROBE FURNISHED BY TEMS FOR ITS RESPECTIVE AHU IN THE SUPPLY DUCTWORK UPSTREAM FROM THE FIRST BRANCH CONNECTION. PROVIDE WIRING AS SHOWN IN DETAIL 8/E710.
13. INSTALL REMOTE TEMPERATURE SENSOR FOR HOOD HD-1 AT THIS LOCATION 66" AFF. COORDINATE LOCATION WITH EQUIPMENT. PROVIDE (2) #18 G. THERMISTOR CABLE FROM TEMPERATURE SENSOR TO HOOD CONTROL PANEL.
14. INSTALL KITCHEN HOOD, HD-1. SUPPORT HOOD PER MANUFACTURER'S INSTALLATION INSTRUCTIONS AND AS DETAILED IN THE ARCHITECTURAL AND STRUCTURAL DRAWINGS. INSTALL HOOD ACCORDING TO THE REQUIREMENTS OF ITS LISTING, IN COMPLIANCE WITH NFPA 96, THE BUILDING CODE, AND AUTHORITIES HAVING JURISDICTION. HOOD SHALL HAVE AN INTEGRAL DUCT COLLAR TEMPERATURE SENSOR TO AUTOMATICALLY ENERGIZE THE EXHAUST AND MAKEUP AIR FANS IF COOKING TEMPERATURES ARE DETECTED. EXHAUST DUCT SYSTEM TO BE WELDED OR FACTORY-MANUFACTURED WATER AND AIR TIGHT. INSTALL CLEANOUTS PER CODE AND AS SHOWN. INSTALL HOOD PER DETAILS 2 AND 4/M700. CHIPOTLE WILL PROVIDE AN INDEPENDENT TESTING AGENCY FOR TESTING THE INTEGRITY OF THE GREASE DUCT SYSTEM.
15. INSTALL REMOTE CONDENSING UNIT FOR WALK-IN COOLER ON ROOF AS DETAILED IN THE ARCHITECTURAL AND STRUCTURAL DRAWINGS. INSTALL REFRIGERANT LINE SET, THERMOSTATIC EXPANSION VALVE, SOLENOID VALVE, TEMPERATURE CONTROL, SIGHT GLASS, FILTER DRIER, PRESSURE CONTROL, LOW AMBIENT CONTROLS, AND WEATHERPROOF HOUSING. TRAP AND SLOPE REFRIGERANT LINES PER MANUFACTURER'S RECOMMENDATIONS. INSTALLATION SHALL COMPLY WITH ASHRAE/ANSI STANDARD 15. INSTALL THE REFRIGERANT LINE SET UNDER THE ROOF DECK TO WITHIN 3' OF THE CONDENSING UNIT. CUT 2-1/2" HOLE IN WALK-IN COOLER ROOF FOR REFRIGERANT LINE SET AND SEAL PER THE COOLER MANUFACTURER'S INSTALLATION INSTRUCTIONS AFTER LINE SET IS INSTALLED.

HVAC PLAN NOTES

16. INSTALL REMOTE CONDENSER FOR ICE MACHINE ON ROOF AS DETAILED IN THE ARCHITECTURAL AND STRUCTURAL DRAWINGS. INSTALL REFRIGERANT LINE SET, THERMOSTATIC EXPANSION VALVE, SOLENOID VALVE, TEMPERATURE CONTROL, SIGHT GLASS, FILTER DRIER, PRESSURE CONTROL, LOW AMBIENT CONTROLS, AND WEATHERPROOF HOUSING. TRAP AND SLOPE REFRIGERANT LINES PER MANUFACTURER'S RECOMMENDATIONS. SEAL PIPING PENETRATIONS THROUGH ROOF. INSTALLATION SHALL COMPLY WITH ASHRAE/ANSI STANDARD 15. INSTALL THE REFRIGERANT LINE SET UNDER THE ROOF DECK TO WITHIN 3' OF THE REMOTE CONDENSER. IF REFRIGERANT PIPING TO ICE MAKER IS EXPOSED TO PUBLIC VIEW CONCEAL WITHIN A STAINLESS STEEL SHROUD AS SHOWN IN THE ARCHITECTURAL DRAWINGS.
17. INSTALL ROOFTOP EQUIPMENT PER MANUFACTURER'S INSTALLATION INSTRUCTIONS AND AS DETAILED IN THE ARCHITECTURAL AND STRUCTURAL DRAWINGS.
18. INSTALL EXHAUST FAN EF-1 PER DETAIL 5/M700 AND AS DETAILED IN THE ARCHITECTURAL AND STRUCTURAL DRAWINGS. INSTALL GREASE VIROGUARD SYSTEM FURNISHED BY CHIPOTLE ON EXHAUST FAN, EF-1.
19. PROVIDE SUPPLY DIFFUSER CONNECTION TO SUPPLY SYSTEM PER DETAIL 1/M700. TYPICAL.
20. DEHUMIDIFIER SHALL BE INSTALLED ON STAND, CLEAR FROM POSSIBLE FLOODING. INSTALL PER MANUFACTURER'S RECOMMENDATIONS.
21. MAINTAIN 10' CLEARANCE BETWEEN WATER HEATER FLUE TERMINATION AND OUTSIDE AIR INTAKES. MAINTAIN 10' CLEARANCE BETWEEN WATER HEATER COMBUSTION AIR INTAKE AND EXHAUST FAN EF-1 DISCHARGE. SEE PLUMBING DRAWINGS FOR MORE INFORMATION ON WATER HEATER FLUE AND COMBUSTION AIR TERMINATIONS.
22. ROUTE DUCTWORK FROM EXISTING OUTSIDE AIR LOUVER OVER TO AIR HANDLING UNITS, CONNECT 10" DUCT TO RETURN DUCT OF AIR HANDLING UNIT WITH BALANCING DAMPER, TYPICAL.
23. MAINTAIN 10' CLEARANCE BETWEEN CONCENTRIC TERMINATION AND OUTSIDE AIR INTAKES. INSTALL PER MANUFACTURER'S RECOMMENDATIONS.

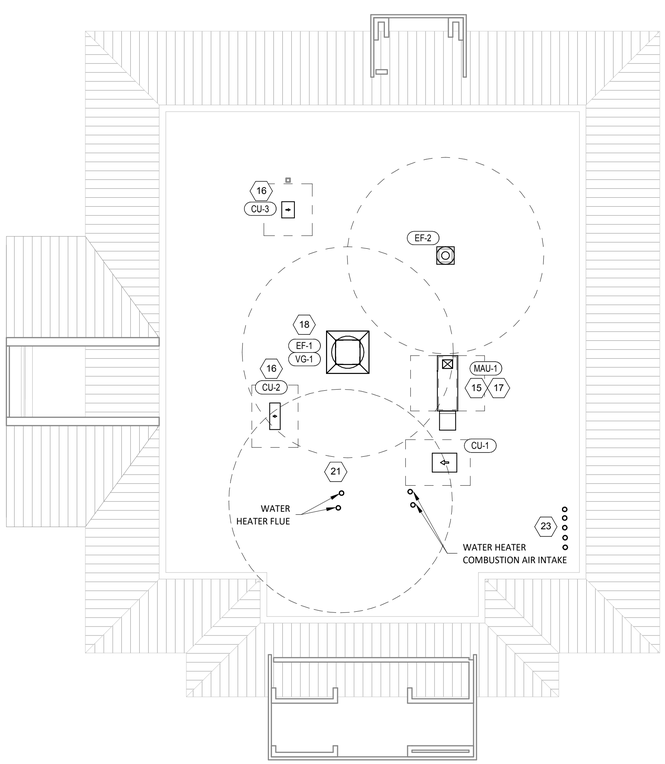

2 M100 **HVAC ROOF PLAN**
1/8" = 1'-0"

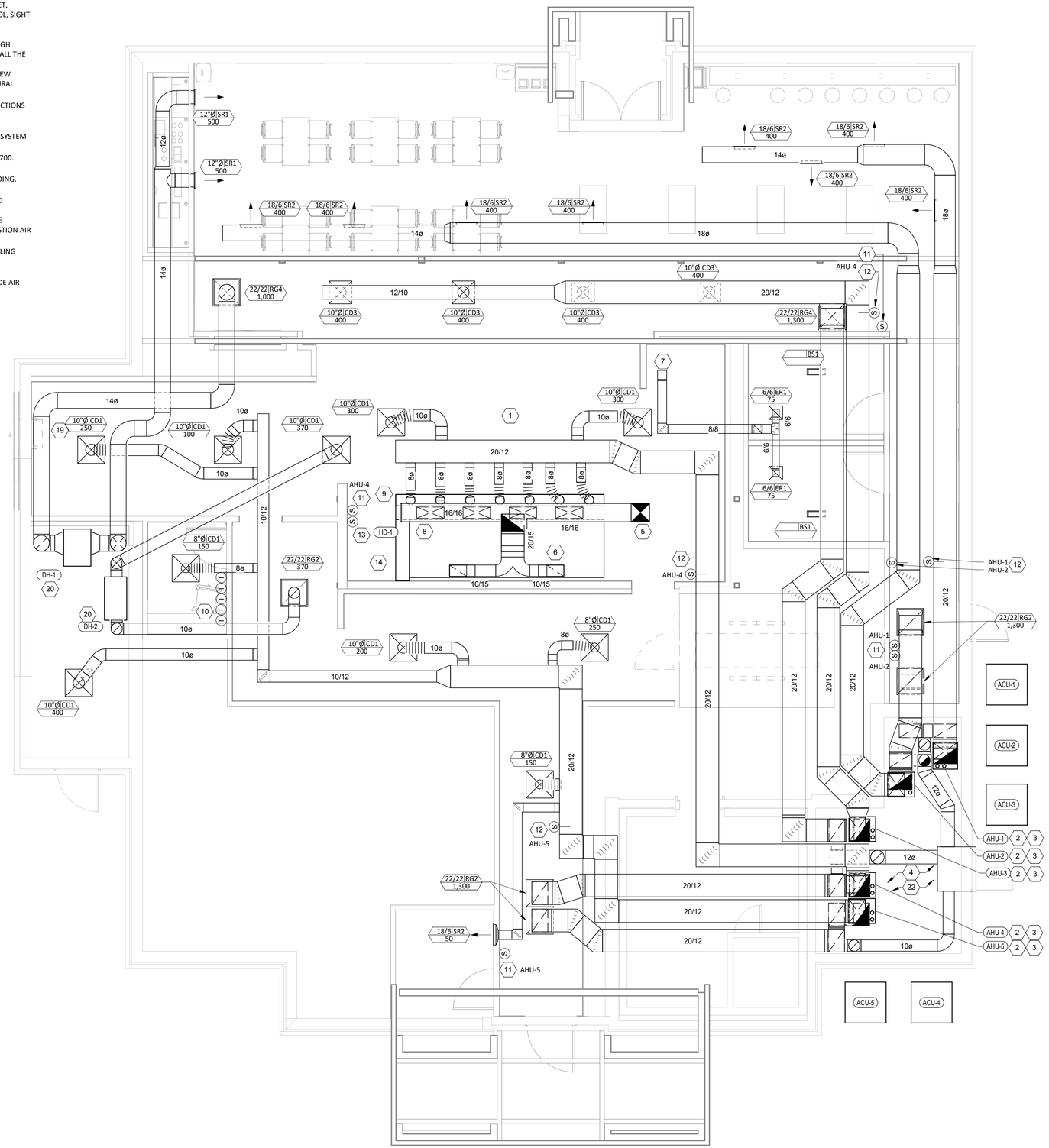

1 M100 **HVAC FLOOR PLAN**
1/4" = 1'-0"

Consultant:

GPD GROUP
Professional Corporation
520 South Main Street, Suite 2531
Akron, Ohio 44311
Ph: 330.572.2100 F: 330.572.2101

COPYRIGHT 2021
THIS DRAWING IS AN INSTRUMENT OF SERVICE AND AS SUCH REMAINS THE PROPERTY OF CHIPOTLE MEXICAN GRILL, INC.. PERMISSION FOR USE OF THIS DOCUMENT IS LIMITED AND CAN BE EXTENDED ONLY BY WRITTEN AGREEMENT WITH CHIPOTLE MEXICAN GRILL, INC..

CHIPOTLE MEXICAN GRILL, INC.
PO BOX 182566
COLUMBUS, OH 43218-2566
TELEPHONE: 614.318.2400
INTERNET: WWW.CHIPOTLE.COM

STORE NO.: 4253
WINDY HILL
2675 WINDY HILL ROAD
MARIETTA, GA 30067

Issue Record:

Revisions:

Drawn: MPC
Checked: MPC

Project No. 2021201.13

Contents: HVAC PLAN

M100

FAN SCHEDULE

TAG	DESCRIPTION	AIRFLOW	E.S.P.	WEIGHT	ELECTRICAL MOTOR POWER	ELECTRICAL V/P/H	FURNISHED BY	INSTALLED BY	BASIS FOR DESIGN MANUFACTURER	BASIS FOR DESIGN MODEL	REMARKS
EF-1	UPBLAST UL762 EXHAUST FAN	3,200 CFM	1.20 in-wg	400 lb	3 hp	208/3/60	HS	GC	CAPTIVE-AIRE	DU240HFA	DIRECT DRIVE UL762 UPBLAST EXHAUST FAN FURNISHED WITH WEATHERPROOF DISCONNECT AND VENTED ROOF CURB
EF-2	DOWNBLAST RESTROOM EXHAUST FAN	150 CFM	0.60 in-wg	100 lb	0.18 hp	120/1/60	HS	GC	CAPTIVE-AIRE	DR12HFA	DIRECT DRIVE DOWNBLAST RESTROOM EXHAUST FAN FURNISHED WITH INTEGRAL DISCONNECT, SPEED CONTROL, BACKDRAFT DAMPER, AND CURB

VIROGUARD SCHEDULE

TAG	COUNT	DESCRIPTION	DUCT CONNECTION SIZE	FAN	FURNISHED BY	INSTALLED BY	BASIS FOR DESIGN MANUFACTURER
VG-1	1	VIROGUARD HOOD EXHAUST FAN ROOFTOP CONTAINMENT SYSTEM	18" X 18"	CAPTIVE-AIRE DU240HFA	TDC	GC	ENVIROMATIC

CONDENSING UNIT SCHEDULE

TAG	DESCRIPTION	NOMINAL CAPACITY	NUMBER OF COMPRESSORS	NUMBER OF CIRCUITS	REFRIGERANT TYPE	REFRIGERANT CHARGE	WEIGHT	ELECTRICAL MOCP	ELECTRICAL FLA	ELECTRICAL V/P/H	FURNISHED BY	INSTALLED BY	BASIS FOR DESIGN MANUFACTURER	BASIS FOR DESIGN MODEL	REMARKS
CU-1	CONDENSING UNIT - WALK-IN COOLER		1	1	R-404A	10.4 lb	250 lb	15 A	9 A	208/3/60	WCS	GC	HARFORD	KPCL99MZOP-3E	FURNISHED WITH WALK-IN COOLER
CU-2	REMOTE CONDENSER - LOW CAPACITY ICE MAKER		0	1	R-404A	11.46 lb	100 lb			120/1/60	KES	GC	HOSHIZAKI	URC-9F	FURNISHED WITH ICE MAKER
CU-3	REMOTE CONDENSER - SODA MACHINE ICE MAKER		0	1	R-404A	3.86 lb	100 lb			120/1/60	KES	GC	HOSHIZAKI	URC-5F	FURNISHED WITH ICE MAKER

MAKEUP AIR UNIT SCHEDULE

TAG	DESCRIPTION	AIRFLOW	E.S.P.	HEATING INPUT	HEATING OUTPUT	HEATING EAT	WEIGHT	ELECTRICAL MOTOR POWER	ELECTRICAL V/P/H	FURNISHED BY	INSTALLED BY	BASIS FOR DESIGN MANUFACTURER	BASIS FOR DESIGN MODEL	REMARKS
MAU-1	DIRECT-FIRED MAKEUP AIR UNIT	1,950 CFM	0.80 in-wg	120,000 Btu/h	220,000 Btu/h	21 °F	650 lb	2 hp	208/3/60	HS	GC	CAPTIVE-AIRE	A1-D.250-G10	12.5:1 MAX TURNDOWN. FURNISHED WITH DISCONNECT, ROOF CURB, SCREEN INTAKE, AND WASHABLE ALUMINUM FILTERS

KITCHEN HOOD SCHEDULE

TAG	DESCRIPTION	MAX COOKING TEMP.	EXHAUST PLENUM AIRFLOW	EXHAUST PLENUM E.S.P.	EXHAUST PLENUM DUCT COLLARS NO.	EXHAUST PLENUM DUCT COLLARS WIDTH	EXHAUST PLENUM DUCT COLLARS LENGTH	EXHAUST PLENUM LENGTH	EXHAUST PLENUM WIDTH	PERFORATED SUPPLY PLENUMS LENGTH	PERFORATED SUPPLY PLENUMS WIDTH	MAU PLENUM AIRFLOW	MAU PLENUM DUCT COLLARS NO.	MAU PLENUM DUCT COLLARS WIDTH	MAU PLENUM DUCT COLLARS LENGTH	AC PLENUM AIRFLOW	AC PLENUM DUCT COLLARS NO.	AC PLENUM DUCT COLLARS DIAMETER	NO. OF LIGHT FIXTURES	WEIGHT	FURNISHED BY	INSTALLED BY	BASIS FOR DESIGN MANUFACTURER	BASIS FOR DESIGN MODEL	REMARKS
HD-1	TYPE I CANOPY HOOD WITH PERFORATED MAU AND AC SUPPLY PLENUMS	600 °F	3,200 CFM	0.86 in-wg	2	10"	1' - 3"	14' - 3"	4' - 3"	15' - 3"	1' - 10"	1,950 CFM	4	10"	2' - 0"	800 CFM	7	8"	10	1,200 lb	HS	GC	CAPTIVE-AIRE	5424 ND-2-ACPSP-F	MAT'L: 18 GA. TYPE 430 SS. FURNISHED WITH VAPORPROOF INCANDESCENT LIGHT FIXTURES, 16" TALL HE SS FILTERS, INTEGRAL UTILITY CABINET, ANSUL SYSTEM, DUCT COLLAR TEMPERATURE SENSOR, PREWIRE PACKAGE, SPARE FIRE SYSTEM DRY CONTACT, AND 4-POLE 20A CONTACTOR

DEHUMIDIFIER SCHEDULE

TAG	DESCRIPTION	AIRFLOW TOTAL	AIRFLOW E.S.P.	REFRIGERANT TYPE	WEIGHT	ELECTRICAL MOCP	ELECTRICAL FLA	ELECTRICAL V/P/H	FURNISHED BY	INSTALLED BY	BASIS FOR DESIGN MANUFACTURER	BASIS FOR DESIGN MODEL
DH-1	HIGH EFFICIENCY DEHUMIDIFIER	1,000 CFM	0.60 in-wg	R-410A	215 lb	25 A	15.8 A	208/1/60	HES	GC	QUEST	335
DH-2	DEHUMIDIFIER	370 CFM	0.60 in-wg	R-410A	140 lb	20 A	8 A	115/1/60	HES	GC	QUEST	155

REMARKS:
1. PROVIDE WITH SUPPLY AND RETURN DUCT KIT.
2. PROVIDE WITH DEHUMIDISTAT.

AIR HANDLING UNIT SCHEDULE

TAG	DESCRIPTION	NOMINAL CAPACITY	SEER	AIRFLOW TOTAL	AIRFLOW OA	AIRFLOW E.S.P.	HEATING CAPACITY INPUT	HEATING CAPACITY OUTPUT	HEATING CAPACITY EAT	REFRIGERANT TYPE	WEIGHT	ELECTRICAL MOCP	ELECTRICAL FLA	ELECTRICAL V/P/H	FURNISHED BY	INSTALLED BY	BASIS FOR DESIGN MANUFACTURER	BASIS FOR DESIGN MODEL
AHU-1	GAS-FIRED SPLIT AIR HANDLING UNIT	4 ton	15	1,600 CFM	300 CFM	0.60 in-wg	100,000 Btu/h	96,000 Btu/h	13 °F	R-410A	200 lb	15 A	10.3 A	115/1/60	HES	GC	YORK	TM9Y100V20MP11
AHU-2	GAS-FIRED SPLIT AIR HANDLING UNIT	4 ton	15	1,600 CFM	300 CFM	0.60 in-wg	100,000 Btu/h	96,000 Btu/h	13 °F	R-410A	200 lb	15 A	10.3 A	115/1/60	HES	GC	YORK	TM9Y100V20MP11
AHU-3	GAS-FIRED SPLIT AIR HANDLING UNIT	4 ton	15	1,600 CFM	300 CFM	0.60 in-wg	100,000 Btu/h	96,000 Btu/h	13 °F	R-410A	200 lb	15 A	10.3 A	115/1/60	HES	GC	YORK	TM9Y100V20MP11
AHU-4	GAS-FIRED SPLIT AIR HANDLING UNIT	4 ton	15	1,600 CFM	300 CFM	0.60 in-wg	100,000 Btu/h	96,000 Btu/h	13 °F	R-410A	200 lb	15 A	10.3 A	115/1/60	HES	GC	YORK	TM9Y100V20MP11
AHU-5	GAS-FIRED SPLIT AIR HANDLING UNIT	4 ton	15	1,600 CFM	300 CFM	0.60 in-wg	100,000 Btu/h	96,000 Btu/h	13 °F	R-410A	200 lb	15 A	10.3 A	115/1/60	HES	GC	YORK	TM9Y100V20MP11

REMARKS:
1. CONTRACTOR SHALL PROVIDE STAND FOR INSTALLATION.
2. PROVIDE WITH 7-DAY PROGRAMMABLE THERMOSTAT.
3. PROVIDE WITH FILTER RACK AND MERV-8 FILTERS.
4. PROVIDE WITH CONCENTRIC TERMINATION KIT.

SPLIT SYSTEM UNIT SCHEDULE

TAG	DESCRIPTION	NOMINAL CAPACITY	SEER	NET COOLING CAPACITY TOTAL	NET COOLING CAPACITY SENSIBLE	EAT DB	EAT WB	COND. EAT	NUMBER OF COMPRESSORS	NUMBER OF CIRCUITS	REFRIGERANT TYPE	WEIGHT	ELECTRICAL MOCP	ELECTRICAL FLA	ELECTRICAL V/P/H	FURNISHED BY	INSTALLED BY	BASIS FOR DESIGN MANUFACTURER	BASIS FOR DESIGN MODEL
ACU-1	AIR COOLED CONDENSING UNIT	4 ton	15	47 Btu/h	38 Btu/h	80 °F	67 °F	95 °F	1	1	R-410A	200 lb	30 A	18.4 A	208/3/60	HES	GC	YORK	TCD48B31S
ACU-2	AIR COOLED CONDENSING UNIT	4 ton	15	47 Btu/h	38 Btu/h	80 °F	67 °F	95 °F	1	1	R-410A	200 lb	30 A	18.4 A	208/3/60	HES	GC	YORK	TCD48B31S
ACU-3	AIR COOLED CONDENSING UNIT	4 ton	15	47 Btu/h	38 Btu/h	80 °F	67 °F	95 °F	1	1	R-410A	200 lb	30 A	18.4 A	208/3/60	HES	GC	YORK	TCD48B31S
ACU-4	AIR COOLED CONDENSING UNIT	4 ton	15	47 Btu/h	38 Btu/h	80 °F	67 °F	95 °F	1	1	R-410A	200 lb	30 A	18.4 A	208/3/60	HES	GC	YORK	TCD48B31S
ACU-5	AIR COOLED CONDENSING UNIT	4 ton	15	47 Btu/h	38 Btu/h	80 °F	67 °F	95 °F	1	1	R-410A	200 lb	30 A	18.4 A	208/3/60	HES	GC	YORK	TCD48B31S

REMARKS:
1. PROVIDE WITH HAIL GUARDS.
2. INSTALL ON CONCRETE PAD.
3. PROVIDE WITH DISCONNECT, PROVIDED BY EC.

AIR BALANCE SCHEDULE

TAG	SUPPLY FLOW	RETURN FLOW	EXHAUST FLOW	SUBTOTAL
AHU-1	1,600 CFM	1,300 CFM	0 CFM	300 CFM
AHU-2	1,600 CFM	1,300 CFM	0 CFM	300 CFM
AHU-3	1,600 CFM	1,300 CFM	0 CFM	300 CFM
AHU-4	1,600 CFM	1,300 CFM	0 CFM	300 CFM
AHU-5	1,600 CFM	1,300 CFM	0 CFM	300 CFM
DH-1	1,000 CFM	1,000 CFM	0 CFM	0 CFM
DH-2	370 CFM	370 CFM	0 CFM	0 CFM
EF-1	0 CFM	0 CFM	3,200 CFM	-3,200 CFM
EF-2	0 CFM	0 CFM	150 CFM	-150 CFM
MAU-1	1,950 CFM	0 CFM	0 CFM	1,950 CFM
NET PRESSURIZATION				100 CFM

CONTROL FUNCTIONS

A. THE MAIN COOKING EXHAUST FAN AND MAKE-UP AIR UNIT SHALL BE INTERLOCKED TO OPERATE TOGETHER. THIS CONTROL CIRCUIT IS ACTIVATED BY A SWITCH AND INCLUDES A FIRE PROTECTION OVERRIDE.
B. THE TEMPERATURE IN EACH ZONE IS CONTROLLED BY SPACE TEMPERATURE SENSORS CONNECTED TO THE THERMOSTATS LOCATED IN THE OFFICE. ALL ZONES SHALL OPERATE WITH CONTINUOUS FAN OPERATION DURING OCCUPIED TIMES AND INTERMITTENTLY AS NEEDED TO MAINTAIN SET POINTS DURING UNOCCUPIED TIMES. OUTSIDE AIR DAMPERS SHALL BE OPEN CONTINUOUSLY WHEN EITHER IN OCCUPIED MODE OR WHEN THE HOOD SYSTEM IS ON AND SHALL BE CLOSED DURING UNOCCUPIED PERIODS.
C. THE THERMOSTATS SHALL DETERMINE OCCUPIED/UNOCCUPIED STATUS BASED ON THE SCHEDULE IN THE ENERGY MANAGEMENT SYSTEM.

AIR TERMINAL SCHEDULE

TAG	DESCRIPTION	FACE SIZE	MATERIAL	FINISH	MOUNTING	FURNISHED BY	INSTALLED BY	BASIS FOR DESIGN MANUFACTURER	BASIS FOR DESIGN MODEL	NOTES
BS1	BATHROOM AIR PURIFICATION UNIT		STAINLESS STEEL	STAINLESS STEEL	SURFACE MOUNT	TUV	GC	RGF ENVIRONMENTAL GROUP	BRU ASSEMBLY	SEE ELECTRICAL SHEETS FOR CONNECTION INFORMATION
CD1	PERFORATED CEILING DIFFUSER	24" X 24"	ALUMINUM	WHITE	LAY-IN CEILING	GC	GC	NAILOR	4320A TYPE L	PROVIDE WITH INTEGRAL OBD
CD3	PERFORATED CEILING DIFFUSER	20" X 20"	ALUMINUM	WHITE	SURFACE MOUNT	GC	GC	NAILOR	4320A TYPE S	PROVIDE WITH INTEGRAL OBD
ER1	PERFORATED CEILING EXHAUST	12" X 12"	ALUMINUM	WHITE	SURFACE MOUNT	GC	GC	NAILOR	4330R TYPE S	PROVIDE INTEGRAL OBD
RG2	PERFORATED CEILING RETURN	24" X 24"	ALUMINUM	WHITE	LAY-IN CEILING	GC	GC	NAILOR	4330R TYPE L	
RG4	PERFORATED CEILING RETURN	24" X 24"	ALUMINUM	WHITE	SURFACE MOUNT	GC	GC	NAILOR	4330R TYPE S	
SR1	ADJUSTABLE TURBO NOZZLE	SEE NECK SIZE	ALUMINUM	WHITE	WALL	GC	GC	SEIHO	NT12	PROVIDE WITH FACE-ACCESSIBLE OBD
SR2	DOUBLE DEFLECTION SUPPLY REGISTER	SEE NECK SIZE	ALUMINUM	WHITE	DUCT	GC	GC	NAILOR	51DH	PROVIDE WITH INTEGRAL OBD

Consultant:
GPD GROUP
Professional Corporation
520 South Main Street, Suite 2531
Akron, Ohio 44311
Ph: 330.572.2100 F: 330.572.2101

COPYRIGHT 2021
THIS DRAWING IS AN INSTRUMENT OF SERVICE AND AS SUCH REMAINS THE PROPERTY OF CHIPOTLE MEXICAN GRILL, INC.. PERMISSION FOR USE OF THIS DOCUMENT IS LIMITED AND CAN BE EXTENDED ONLY BY WRITTEN AGREEMENT WITH CHIPOTLE MEXICAN GRILL, INC..

CHIPOTLE MEXICAN GRILL, INC.
PO BOX 182566
COLUMBUS, OH 43218-2566
TELEPHONE: 614.318.2400
INTERNET: WWW.CHIPOTLE.COM

STORE NO.: 4253
WINDY HILL
2675 WINDY HILL ROAD
MARIETTA, GA 30067

Issue Record:

Revisions:

Drawn: MPC
Checked: MPC

Project No. 2021201.13

Contents: HVAC SCHEDULES

M600

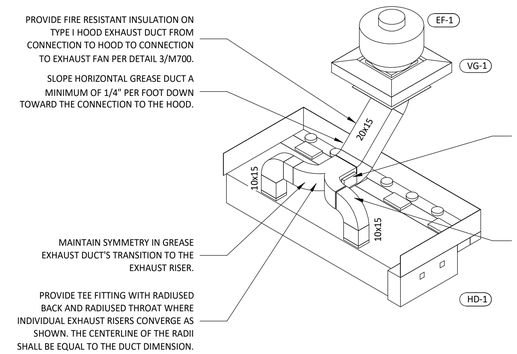

7 / M700 HOOD EXHAUST ISOMETRIC

12" = 1'-0"

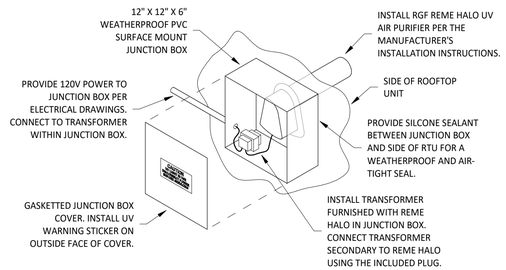

INSTALLATION LOCATION

INSTALL AIR PURIFIER WITH JUNCTION BOX ON OUTSIDE FACE OF ROOFTOP UNIT AND WITH UV LAMP TUBE EXTENDING INTO THE INTERIOR OF THE ROOFTOP UNIT. FIELD VERIFY EXACT LOCATION TO AVOID DAMAGING, TOUCHING, OR INTERFERING WITH ANY RTU INTERIOR COMPONENTS. INSTALLATION LOCATION SHALL BE AS FOLLOWS:

TRANE: INSTALL INTO THE SUPPLY AIR STREAM THROUGH THE REMOVABLE PANEL COVERING THE HORIZONTAL DISCHARGE SUPPLY AIR OPENING.

YORK: INSTALL INTO THE SUPPLY AIR PLENUM FROM THE BACK SIDE OF THE UNIT JUST ABOVE THE HEAT EXCHANGER.

6 / M700 UV AIR PURIFIER INSTALLATION

NOT TO SCALE

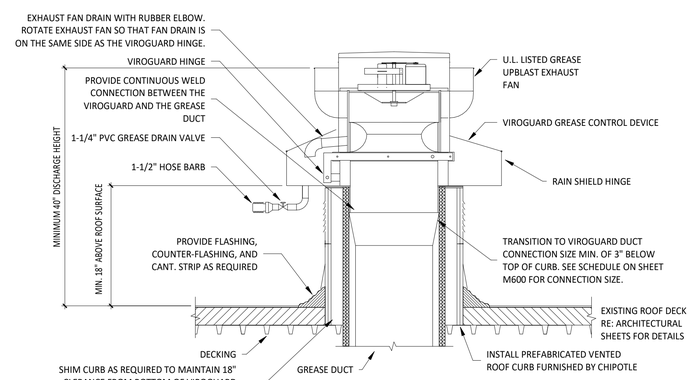

NOTE:
1. INSTALLATION SHALL BE IN ACCORDANCE WITH NFPA 96 REQUIREMENTS.
2. HINGE FAN SO IT TIPS BACK TOWARD FAN DRAIN AND TOWARD VIROGUARD DRAIN.

5 / M700 GREASE EXHAUST FAN

NOT TO SCALE

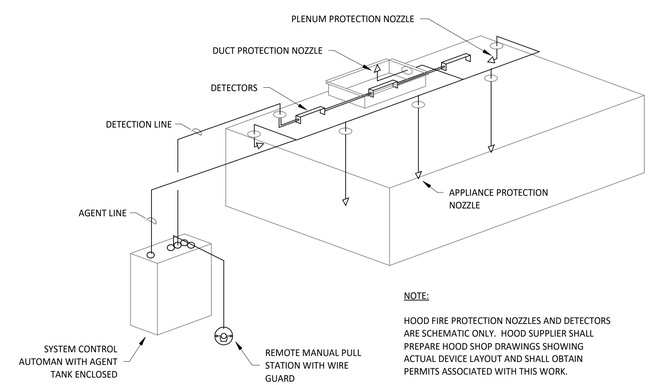

NOTE:

HOOD FIRE PROTECTION NOZZLES AND DETECTORS ARE SCHEMATIC ONLY. HOOD SUPPLIER SHALL PREPARE HOOD SHOP DRAWINGS SHOWING ACTUAL DEVICE LAYOUT AND SHALL OBTAIN PERMITS ASSOCIATED WITH THIS WORK.

4 / M700 FIRE SUPPRESSION SYSTEM SCHEMATIC

NOT TO SCALE

FIRE RATED ENCLOSURE - GREASE DUCTS

1. THERMAL CERAMICS FIREMASTER FASTWRAP XL IS TESTED TO ASTM E2336 AND UL LISTED PER HNKT.G18 TO PROVIDE ZERO CLEARANCE TO COMBUSTIBLES AND TO PROVIDE A 1- OR 2-HOUR ENCLOSURE. THROUGH PENETRATIONS FIRESTOP SYSTEMS ARE TESTED IN ACCORDANCE WITH ASTM E 814 (UL 1479). ICC CODE EVALUATION PER REPORT UL ER 14229-01.
2. COMPLIANT TO THE FOLLOWING CODES:
   NFPA 96
   INTERNATIONAL MECHANICAL CODES
   UNIFORM MECHANICAL CODE.
   CALIFORNIA MECHANICAL CODE
3. INSULATION APPLIED IN TWO LAYERS WITH TIGHT COMPRESSION JOINT ON BOTH LAYERS AT ALL JOINTS.
4. MINIMUM 16 GAUGE CARBON STEEL (OR 18 GAGE STAINLESS STEEL) RECTANGULAR OR ROUND GREASE EXHAUST DUCT
5. INSTALL UL LISTED AND LIQUID TIGHT THERMAL CERAMICS FASTDOOR XL ACCESS DOORS, OR ALTERNATE DOOR UL LISTED PER UL1978, AT ALL CHANGES IN DIRECTION AND AT MINIMUM EVERY 20 FT ON HORIZONTAL RUNS.
6. SUPPORT HANGER SYSTEMS DO NOT NEED TO BE WRAPPED PROVIDED THE HANGER RODS ARE MINIMUM OF 3/8 IN. DIAMETER AND SUPPORTS ARE MINIMUM 2 X 2 X 1/8 IN. STEEL ANGLE OR SMACNA EQUIVALENT SUPPORT SYSTEM.
7. THERMAL CERAMICS DUCT WRAP SHALL BE INSTALLED DIRECTLY ONTO THE DUCT AND APPLIED FROM THE HOOD CONNECTION TO THE CONNECTION TO THE FAN.
8. THERMAL CERAMICS DUCT ENCLOSURE SYSTEM SHALL BE INSTALLED IN STRICT ACCORDANCE WITH MANUFACTURERS INSTRUCTIONS AND UL LISTINGS.

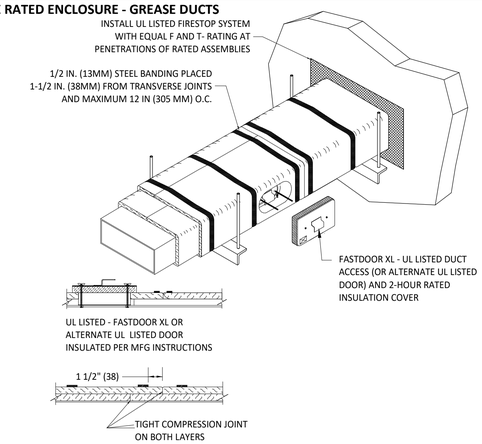

3 / M700 FIREMASTER DUCT WRAP - UL HNKT-G18

NOT TO SCALE

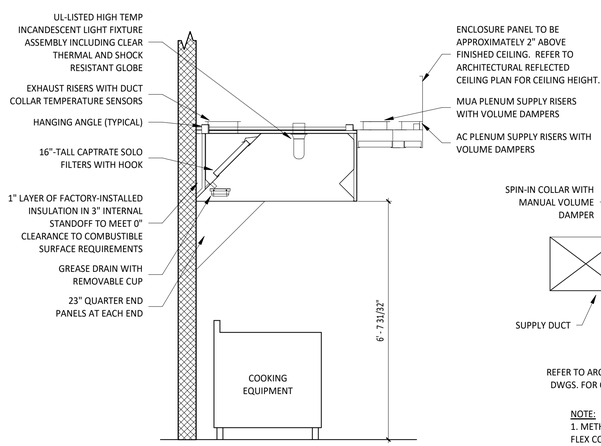

2 / M700 HOOD SECTION VIEW

NOT TO SCALE

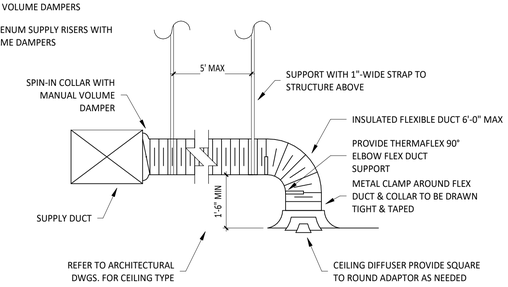

NOTE:
1. METHOD OF INSTALLATION FOR AIRTIGHT SEAL IS TYPICAL FOR ALL FLEX CONNECTIONS TO AIR DISTRIBUTION DEVICES.

1 / M700 DIFFUSER CONNECTION

NOT TO SCALE

Consultant:

GPD GROUP
Professional Corporation
520 South Main Street, Suite 2531
Akron, Ohio 44311
Ph: 330.572.2100 F: 330.572.2101

COPYRIGHT 2021
THIS DRAWING IS AN INSTRUMENT OF SERVICE AND AS SUCH REMAINS THE PROPERTY OF CHIPOTLE MEXICAN GRILL, INC.. PERMISSION FOR USE OF THIS DOCUMENT IS LIMITED AND CAN BE EXTENDED ONLY BY WRITTEN AGREEMENT WITH CHIPOTLE MEXICAN GRILL, INC..

CHIPOTLE MEXICAN GRILL, INC.
PO BOX 182566
COLUMBUS, OH 43218-2566
TELEPHONE: 614.318.2400
INTERNET: WWW.CHIPOTLE.COM

STORE NO.: 4253

WINDY HILL
2675 WINDY HILL ROAD
MARIETTA, GA 30067

Issue Record:

Revisions:

Drawn: MPC

Checked: MPC

Project No. 2021201.13

Contents: HVAC DETAILS

M700