SECTION 15732 - PACKAGED ROOFTOP AIR-CONDITIONING UNITS

PART 1 - GENERAL

1.1 SECTION REQUIREMENTS

A. Submittals: Product Data and Shop Drawings.
B. Comply with ASHRAE 15.
C. EER: Equal to or greater than prescribed by the energy code adopted by the Authority Having Jurisdiction.
D. Warranties: Submit a written warranty, signed by the manufacturer, agreeing to the repair or replacement of components that fail within 5 years of Substantial Completion.

PART 2 - PRODUCTS

2.1 PACKAGED UNITS, 5 TO 20 TONS

A. Factory assembled and tested, consisting of compressors, condensers, evaporator coils, condenser and evaporator fans, refrigeration and temperature controls, filters, and dampers.
   1. Refer to Rooftop Heating/Cooling Unit Schedule on drawing M600 for capacities, and manufacturers.
   2. Evaporator Fans: Belt or direct driven, forward curved centrifugal.
   3. Exhaust/Relief Fans: Direct drive, forward curved centrifugal or propeller.
   4. Condenser Fans: Direct drive propeller.
   5. Refrigerant Coils: Aluminum fins and copper coil.
   6. Compressors: Serviceable hermetic or fully hermetic, with safety controls, hot gas bypass, and timed off controls.
   7. Heat Exchangers: Gas fired, with gas controls, electronic ignition, high limit cutout, and forced draft proving switch.
   8. Economizer controls (Comparative Enthalpy, 100% capacity).
   9. Smoke Detectors: Photoelectric in supply and/or return as called for in schedule on sheet M600.
   10. Operating Controls: Two stage heating and two stage cooling on units 7-1/2 tons and over.
   11. Roof curb.
   12. Control Wiring from T-stat to rooftop unit: Shall be 18ga / 7 conductor, rated for plenum applications.
   13. Control Wiring from T-stat to remote sensor: Shall be a separate 18ga / 2 conductor shielded, rated for plenum applications.

PART 3 - EXECUTION

3.1 INSTALLATION

A. Install units level and plumb and firmly anchored.
B. Connect gas piping to burner with pipe same size as gas train inlet, and provide union with sufficient clearance for burner removal and service.
C. Install ducts to termination in roof mounting frames. Terminate ducts through roof structure.
D. Connect units to wiring systems and to ground.

END OF SECTION 15732

SECTION 15810 - DUCTS AND ACCESSORIES

PART 1 - GENERAL

1.1 SECTION REQUIREMENTS

A. Submittals: Product Data for fire and smoke dampers.
B. Comply with NFPA 90A for systems serving spaces more than 25,000 cu. ft. in volume or building Types II, IV, and V construction more than 3 stories in height.
C. Comply with NFPA 90B for systems serving spaces in 1 or 2 family dwellings or serving spaces less than 25,000 cu. ft..
D. Comply with NFPA 96, "Ventilation Control and Fire Protection of Commercial Cooking Operations," for kitchen hood ducts.
E. Comply with UL 181 and UL 181A for ducts and closures.
F. Testing, Adjusting, and Balancing Agency Qualifications: AABC certified (to be furnished by Tenant).

PART 2 - PRODUCTS

2.1 DUCTS

A. Spiral Duct: Spiral Lock Seam, without insulation, G90 galvanized finish, ASTM A-653/924
   1. Basis of Design Manufacturers: Lindab SPIROsafe, alternates to the basis of design must be submitted for review.
   2. Fittings: Factory produced standing seam construction with internal sealing. Fittings with a major axis of 36" or smaller shall be 20 gauge. Fittings with a major axis of 37"-48" shall be 18 gauge.
B. Galvanized Steel Sheet: Forming steel, ASTM A 653/653M, G90 coating designation.
C. Duct Liner: ASTM C 1071, Type II, with an airstream surface coated with a temperature resistant coating. Thickness: 1-1/2 inch. R-value : 8.
   1. Adhesive: ASTM C 916, Type I.
   2. Mechanical Fasteners: Galvanized steel pin, length as required to penetrate liner plus a 1/8 inch projection maximum into the airstream.
D. Joint and Seam Tape: Comply with UL 181A.
E. Joint and Seam Sealant: Comply with UL 181A.
F. Rectangular Metal Duct Fabrication: Comply with SMACNA's "HVAC Duct Construction Standard" for metal thickness, reinforcing types and intervals, tie rod applications, and joint types and intervals.

2.2 ACCESSORIES

A. Volume-Control Dampers: Factory fabricated volume control dampers, complete with required hardware and accessories. Single blade and multiple opposed blade, standard leakage rating, and suitable for horizontal or vertical applications.
B. Fire Dampers: Factory-fabricated fire dampers, complete with required hardware and accessories. UL labeled according to UL 555, "Fire Dampers".
C. Flexible Connectors: Flame retardant or noncombustible fabrics, coatings, and adhesives complying with UL 181, Class 1.
D. Flexible Ducts: Factory fabricated, insulated, round duct, with an outer jacket enclosing 2 inch thick, glass fiber insulation, R-value: 6.0, around a continuous inner liner.

PART 3 - EXECUTION

3.1 INSTALLATION

A. Duct System Pressure Class: Construct and install each duct system with 2 inch positive and negative duct pressure classifications.
B. Conceal ducts from view in finished and occupied spaces. Except where noted as exposed.
C. Avoid passing through electrical equipment spaces and enclosures.
D. Support and connect metal ducts according to SMACNA's "HVAC Duct Construction Standard".
E. Install duct accessories according to applicable portions of details of construction as shown in SMACNA standards.
F. Install liner and/or insulation on ductwork per the material schedule on sheet M010.
G. Install volume control dampers in lined duct with methods to avoid damage to liner and to avoid erosion of duct liner.
H. Install fire and smoke dampers according to manufacturer's UL approved written instructions.
I. Install fusible links in fire dampers.
J. Provide saddle taps at tees for exposed ductwork.

3.2 TESTING, ADJUSTING, AND BALANCING

A. The Tenant will supply an independent balance agent to to balance and adjust the HVAC installation. The balance agent will be responsible for any pulley or belt changes required.
B. The GC is to have trained staffed available during the balancing to correct issues noted by the balance agent.
C. The balance agent is to balance airflow within distribution systems, including submains, branches, and terminals to indicated quantities +/- 10%. The hood exhaust system shall be balanced to a tolerance of -0+10% and the make-up air system to a tolerance of -10+0%.
D. The balance agent is to supply a copy of the balance report to the Tenant, engineer and general contractor for review.

END OF SECTION 15810

SECTION 15855 - DIFFUSERS, REGISTERS, AND GRILLES

PART 1 - GENERAL

1.1 SECTION REQUIREMENTS

A. Submittals: None.

PART 2 - PRODUCTS

2.1 OUTLETS AND INLETS

A. All air terminal devices:
   1. Refer to Grills, Registers, and Diffusers Schedule for equipment schedule
   2. Manufacturer: As scheduled (NO SUBSTITUTIONS)
   3. Material: As scheduled.
   4. Finish: As scheduled.
   5. Mounting: As scheduled.

PART 3 - EXECUTION

3.1 INSTALLATION

A. Coordinate location and installation with duct installation and installation of other ceiling and wall mounted items.
B. Locate ceiling diffusers, registers, and grilles, as indicated on the architectural "reflected ceiling plans." Unless otherwise indicated, locate units in center of acoustical ceiling panels.

END OF SECTION 15855

HVAC MATERIAL SCHEDULE

CATEGORY	APPLICATION	ALLOWABLE MATERIAL
DUCT	EXPOSED SUPPLY	RECT. LINED OR ROUND AS SHOWN, NO EXPOSED DUCT-SEALING MASTIC
	EXPOSED RETURN	RECTANGULAR, NO EXPOSED DUCT-SEALING MASTIC
	EXPOSED GEN. EXHAUST	RECTANGULAR OR ROUND AS SHOWN, NO EXPOSED DUCT-SEALING MASTIC
	CONCEALED, SUPPLY	RECT. OR ROUND AS SHOWN, LINED OR INSULATED
	CONCEALED, RETURN	RECT. OR ROUND AS SHOWN, LINED OR INSULATED
	CONCEALED, GEN. EXHAUST	RECT. OR ROUND AS SHOWN
	CONCEALED, TYPE I HOOD EXHAUST	RECTANGULAR 16 GA. BLACK IRON W/ WRAP OR UL 1978 FACTORY-MANUFACTURED DUCT W/ WRAP (SUBMIT SHOP DRAWINGS FOR FACTORY-MANUFACTURED DUCT PRIOR TO ORDERING FOR APPROVAL)

HVAC GENERAL NOTES

A GENERAL NOTES APPLY TO HVAC SHEETS.

B WORK SHALL COMPLY WITH STATE AND LOCAL CODE REQUIREMENTS AS APPROVED AND AMENDED BY THE AUTHORITY HAVING JURISDICTION, INCLUDING APPLICABLE SECTIONS OF NFPA, THE MECHANICAL CODE, AND ANY INTERIM AMENDMENTS AT THE TIME OF THE PROPOSAL. PURCHASE PERMITS ASSOCIATED WITH THE WORK. OBTAIN INSPECTIONS REQUIRED BY CODE. SEE ARCHITECTURAL SHEETS FOR THE PREVAILING CODES.

C CONTRACTOR AND SUBCONTRACTORS SHALL REVIEW A COMPLETE SET OF THE CONSTRUCTION DOCUMENTS.

D COORDINATE WORK WITH THE WORK OF OTHER TRADES, EQUIPMENT FURNISHED BY OTHERS, REQUIREMENTS OF THE OWNER, AND OF THE EXISTING CONDITIONS AT THE PROJECT SITE.

E DRAWINGS FOR THE MECHANICAL WORK ARE DIAGRAMMATIC, SHOWING THE GENERAL LOCATION, TYPE, LAYOUT, AND EQUIPMENT REQUIRED. THE DRAWING SHALL NOT BE SCALED FOR EXACT MEASUREMENTS, REFER TO ARCHITECTURAL DRAWINGS FOR DIMENSIONS. REFER TO MANUFACTURER'S STANDARD INSTALLATION DRAWINGS FOR EQUIPMENT CONNECTIONS AND INSTALLATION REQUIREMENTS. PROVIDE DUCTWORK, CONNECTIONS, OFFSETS, ACCESSORIES, AND MATERIALS NECESSARY FOR A COMPLETE SYSTEM.

F DUCT DIMENSIONS ON PLANS INDICATE DIMENSIONS OF INTERNAL FREE AREA.

G PERFORATED CEILING DIFFUSERS SHALL BE 4-WAY UNLESS NOTED OTHERWISE.

H COORDINATE ROOF WORK WITH THE OWNER'S CONSTRUCTION MANAGER PRIOR TO CONSTRUCTION.

I UNLESS NOTED OTHERWISE RECTANGULAR DUCT ELBOWS GREATER THAN 45° SHALL BE MITERED ELBOWS WITH DOUBLE-THICKNESS TURNING VANES AND RECTANGULAR DUCT ELBOWS 45° OR LESS SHALL BE RADIUSED ELBOWS WITH AN INSIDE RADIUS OF AT LEAST 1/2 THE WIDTH OF THE DUCT.

J REPLACE AIR FILTERS WITH NEW, CLEAN MERV 8 AIR FILTERS AT TURNOVER.

K THE TERM "FURNISH" MEANS SUPPLY AND DELIVER TO THE PROJECT SITE, READY FOR UNLOADING, UNPACKING, ASSEMBLY, INSTALLATION, AND SIMILAR OPERATIONS. THE TERM "INSTALL" DESCRIBES THE OPERATIONS AT THE PROJECT SITE INCLUDING THE ACTUAL UNLOADING, UNPACKING, ASSEMBLY, ERECTING, PLACING, ANCHORING, APPLYING, WORKING TO DIMENSION, FINISHING, CURING, PROTECTING, CLEANING, AND SIMILAR OPERATIONS. THE TERM "PROVIDE" MEANS TO FURNISH AND INSTALL, COMPLETE AND READY FOR THE INTENDED USE.

L INSTALL LABELING CALLED FOR IN THE MECHANICAL DRAWINGS USING ENGRAVED PHENOLIC PLATES (WHITE WITH BLACK LETTERING).

M PROVIDE P3000 12 GA. UNISTRUT WITH PG FINISH FOR DUCT SUPPORTS AND OTHER UNISTRUT IN AREAS EXPOSED TO VIEW. SLOTTED UNISTRUT AND OTHER UNISTRUT WITH HOLES IS NOT ACCEPTABLE.

HVAC ABBREVIATIONS

AFF	ABOVE FINISHED FLOOR
AFG	ABOVE FINISHED GRADE
CD	CEILING DIFFUSER
CU	CONDENSING UNIT
(E)	EXISTING
EF	EXHAUST FAN
ER	EXHAUST REGISTER
EXT'G	EXISTING
HD	HOOD
MUA	MAKEUP AIR UNIT
OBD	BLADE DAMPER
RG	RETURN GRILLE
RTU	ROOFTOP UNIT
SR	SUPPLY REGISTER
VSC	VARIABLE SPEED CONTROL
CO2AS	TENANT'S CO2 ALARM SUPPLIER
GC	GENERAL CONTRACTOR
HES	TENANT'S HVAC EQUIPMENT SUPPLIER
HS	TENANT'S HOOD SUPPLIER
KES	TENANT'S KITCHEN EQUIPMENT SUPPLIER
TAB	TENANT'S TEST AND BALANCE VENDOR
TCC	TENANT'S CABLING CONTRACTOR
TDC	TENANT'S DUCT CLEANER
TEMS	TENANT'S ENERGY MANAGEMENT SYSTEM SUPPLIER
TLS	TENANT'S LIGHT/LAMP SUPPLIER
TMB	TENANT'S MENU BOARD SUPPLIER
TMS	TENANT'S MILLWORK SUPPLIER
TP	TENANT'S PHONE SUPPLIER
TPS	TENANT'S PANELBOARD SUPPLIER
TRS	TENANT'S RAILING SUPPLIER
TSV	TENANT'S SIGN VENDOR
TUV	TENANT'S UV SANITIZER SUPPLIER
WCS	TENANT'S WALK-IN COOLER SUPPLIER
WHS	TENANT'S WATER HEATER SUPPLIER

HVAC SYMBOLS

CEILING DIFFUSER

CEILING-MOUNTED RETURN OR EXHAUST REGISTER

SUPPLY REGISTER

RETURN GRILLE

FLEXIBLE DUCT

MITERED CORNER WITH TURNING VANES

W/H — DUCTWORK INTERNAL FREE DIMENSIONS (WIDTH/HEIGHT) RECTANGULAR TO ROUND DUCT TRANSITION

S — DUCT-MOUNTED SMOKE DETECTOR

M — MOTOR-OPERATED DAMPER

MANUAL VOLUME DAMPER

GREASE DUCT CLEANOUT

MITERED CORNER WITHOUT TURNING VANES

T — GRIDPOINT THERMOSTAT

S — GRIDPOINT ZONE SENSOR MODULE

S — GRIDPOINT SUPPLY PROBE

— PLAN NOTE: SEE PLAN NOTES LISTED ON THE SAME SHEET FOR NOTE MEANING

CONNECT TO EXISTING

XX-# — EQUIPMENT TAG: SEE EQUIPMENT SCHEDULE ON SHEET M600 FOR EQUIPMENT INFORMATION

A V — AUDIO/VISUAL REMOTE SMOKE DETECTOR ANNUNCIATOR WITH REMOTE KEY OPERATED RESET

12"Ø CD1 / 550 — GRILL, REGISTER, OR DIFFUSER TAG:
TAG
NECK SIZE
AIRFLOW [CFM]

Consultant:

NATIONAL ENGINEERING

4635 Trueman Blvd. Suite 250
Hilliard, Ohio 43026
Phone: (614) 751-9610
Fax: (614) 552-5240
Contact: Joe Jones
(614) 328-2024
jjones@nationalengineering.com

FOR CONSTRUCTION

COPYRIGHT 2025
THIS DRAWING IS AN INSTRUMENT OF SERVICE AND AS SUCH REMAINS THE PROPERTY OF CHIPOTLE MEXICAN GRILL, INC.. PERMISSION FOR USE OF THIS DOCUMENT IS LIMITED AND CAN BE EXTENDED ONLY BY WRITTEN AGREEMENT WITH CHIPOTLE MEXICAN GRILL, INC..

CHIPOTLE MEXICAN GRILL, INC.
PO BOX 182566
COLUMBUS, OH 43218-2566
TELEPHONE: (614) 318-2400
INTERNET: WWW.CHIPOTLE.COM

STORE NO.: 5083

HERITAGE & 64
7745 SR 64 E
BRADENTON, FL 34212

Issue Record:

10-02-2024	PERMIT SET
02-26-2025	BID SET
06-06-2025	CONSTRUCTION SET

Revisions:

Drawn: JEJ

Checked: CJK

Project No. 2301099

Contents: HVAC SPECIFICATIONS

M010

HVAC PLAN NOTES

1. SEE ARCHITECTURAL REFLECTED CEILING PLAN FOR CEILING MOUNTED EQUIPMENT LOCATION. TYPICAL.
2. PAINT DUCTWORK VISIBLE THROUGH DINING ROOM SUPPLY REGISTERS AND RETURN GRILL BLACK. TYPICAL.
3. ADJUST SUPPLY REGISTERS SO THAT SUPPLY AIR HITS WALL ON OPPOSITE SIDE OF ROOM AT APPROXIMATELY 7' AFF WITH NO DRAFTS FELT IN THE DINING ROOM.
4. 30/14 DUCT UP FOR TRANSITION TO RTU-1 RETURN CONNECTION IN ROOF CURB.
5. 30/14 DUCT UP FOR TRANSITION TO RTU-2 RETURN CONNECTION IN ROOF CURB.
6. 24/18 DUCT UP FROM BUILDING SUPPLY THROUGH ROOF. TRANSITION TO RTU-1 SUPPLY CONNECTION IN ROOF CURB. RTU-1 SHALL HAVE AN INTEGRAL SMOKE DETECTOR MOUNTED IN THE SUPPLY AIR STREAM. INTERLOCK SMOKE DETECTOR TO RTU-1 OPERATION.
7. 26/18 DUCT UP FROM BUILDING SUPPLY TO RTU-2 SUPPLY CONNECTION. TRANSITION IN ROOF CURB. RTU-2 SHALL HAVE AN INTEGRAL SMOKE DETECTOR MOUNTED IN THE SUPPLY AIR STREAM. INTERLOCK SMOKE DETECTOR TO RTU-2 OPERATION.
8. 14/14 DUCT UP THROUGH ROOF. TRANSITION TO MAU-1 SUPPLY CONNECTION IN ROOF CURB.
9. 16/16 DUCT UP FROM HOOD THROUGH ROOF TO EF-1 COMPLIANT WITH NFPA 96. PROVIDE RADIUSED ELBOWS WITH AN INSIDE RADIUS OF 0.5W AT ELBOWS IN GREASE DUCT.
10. 8/6 DUCT UP THROUGH ROOF TO EF-2.
11. 28/6 DUCT DOWN TO MAKEUP AIR PSP DUCT CONNECTION. TRANSITION TO SUPPLY PLENUM OPENING SIZE. TYPICAL FOR 3.
12. 8" DIA. DUCT DOWN TO AC PSP DUCT CONNECTION. TRANSITION TO SUPPLY PLENUM OPENING SIZE. TYPICAL. CAP UNUSED DUCT CONNECTIONS.
13. INSTALL SINGLE GANG VERTICAL J-BOX GRIDPOINT THERMOSTATS FURNISHED BY TEMS FOR RTU-1 AND RTU-2 AT THIS LOCATION AT 48" AFF. COORDINATE WITH ELECTRICAL SWITCHING IN THIS AREA. PROVIDE WIRING AS SHOWN IN DETAIL 8/E710.
14. INSTALL GRIDPOINT ZONE SENSOR MODULE FURNISHED BY TEMS FOR RTU-1 AT THIS LOCATION 60" AFF DIRECTLY TO WALL (NO JUNCTION BOX). COORDINATE LOCATION WITH EQUIPMENT. PROVIDE WIRING AS SHOWN IN DETAIL 8/E710.
15. INSTALL GRIDPOINT ZONE SENSOR MODULE FURNISHED BY TEMS FOR RTU-2 AT THIS LOCATION 66" AFF DIRECTLY TO WALL (NO JUNCTION BOX). COORDINATE LOCATION WITH EQUIPMENT. PROVIDE WIRING AS SHOWN IN DETAIL 8/E710.
16. INSTALL GRIDPOINT SUPPLY PROBE FURNISHED BY TEMS FOR RTU-1 IN THE SUPPLY DUCTWORK UPSTREAM FROM THE FIRST BRANCH CONNECTION. PROVIDE WIRING AS SHOWN IN DETAIL 8/E710.
17. INSTALL GRIDPOINT SUPPLY PROBE FURNISHED BY TEMS FOR RTU-2 IN THE SUPPLY DUCTWORK UPSTREAM FROM THE FIRST BRANCH CONNECTION. PROVIDE WIRING AS SHOWN IN DETAIL 8/E710.
18. INSTALL REMOTE TEMPERATURE SENSOR FOR HOOD HD-1 AT THIS LOCATION 60" AFF. COORDINATE LOCATION WITH EQUIPMENT. PROVIDE (2) #18 G. THERMISTOR CABLE FROM TEMPERATURE SENSOR TO HOOD CONTROL PANEL.
19. INSTALL KITCHEN HOOD, HD-1. SUPPORT HOOD PER MANUFACTURER'S INSTALLATION INSTRUCTIONS AND AS DETAILED IN THE ARCHITECTURAL AND STRUCTURAL DRAWINGS. INSTALL HOOD ACCORDING TO THE REQUIREMENTS OF ITS LISTING, IN COMPLIANCE WITH NFPA 96, THE BUILDING CODE, AND AUTHORITIES HAVING JURISDICTION. HOOD SHALL HAVE AN INTEGRAL DUCT COLLAR TEMPERATURE SENSOR TO AUTOMATICALLY ENERGIZE THE EXHAUST AND MAKEUP AIR FANS IF COOKING TEMPERATURES ARE DETECTED. EXHAUST DUCT SYSTEM TO BE WELDED OR FACTORY-MANUFACTURED WATER AND AIR TIGHT. INSTALL CLEANOUTS PER CODE AND AS SHOWN. INSTALL HOOD PER DETAILS 2, 4, AND 9/M700. CHIPOTLE WILL PROVIDE AN INDEPENDENT TESTING AGENCY FOR TESTING THE INTEGRITY OF THE GREASE DUCT SYSTEM.
20. INSTALL REMOTE CONDENSING UNIT FOR WALK-IN COOLER ON ROOF AS DETAILED IN THE ARCHITECTURAL AND STRUCTURAL DRAWINGS. INSTALL REFRIGERANT LINE SET, THERMOSTATIC EXPANSION VALVE, SOLENOID VALVE, TEMPERATURE CONTROL, SIGHT GLASS, FILTER DRIER, PRESSURE CONTROL, LOW AMBIENT CONTROLS, AND WEATHERPROOF HOUSING. TRAP AND SLOPE REFRIGERANT LINES PER MANUFACTURER'S RECOMMENDATIONS. INSTALLATION SHALL COMPLY WITH ASHRAE/ANSI STANDARD 15. INSTALL THE REFRIGERANT LINE SET UNDER THE ROOF DECK TO WITHIN 3' OF THE CONDENSING UNIT. CUT 2-1/2" HOLE IN WALK-IN COOLER ROOF FOR REFRIGERANT LINE SET AND SEAL PER THE COOLER MANUFACTURER'S INSTALLATION INSTRUCTIONS AFTER LINE SET IS INSTALLED.
21. INSTALL REMOTE CONDENSER FOR ICE MACHINE ON ROOF AS DETAILED IN THE ARCHITECTURAL AND STRUCTURAL DRAWINGS. INSTALL REFRIGERANT LINE SET, THERMOSTATIC EXPANSION VALVE, SOLENOID VALVE, TEMPERATURE CONTROL, SIGHT GLASS, FILTER DRIER, PRESSURE CONTROL, LOW AMBIENT CONTROLS, AND WEATHERPROOF HOUSING. TRAP AND SLOPE REFRIGERANT LINES PER MANUFACTURER'S RECOMMENDATIONS. SEAL PIPING PENETRATIONS THROUGH ROOF. INSTALLATION SHALL COMPLY WITH ASHRAE/ANSI STANDARD 15. INSTALL THE REFRIGERANT LINE SET UNDER THE ROOF DECK TO WITHIN 3' OF THE REMOTE CONDENSER. IF REFRIGERANT PIPING TO ICE MAKER IS EXPOSED TO PUBLIC VIEW CONCEAL WITHIN A STAINLESS STEEL SHROUD AS SHOWN IN THE ARCHITECTURAL DRAWINGS.
22. INSTALL ROOFTOP EQUIPMENT PER MANUFACTURER'S INSTALLATION INSTRUCTIONS AND AS DETAILED IN THE ARCHITECTURAL AND STRUCTURAL DRAWINGS.
23. INSTALL EXHAUST FAN EF-1 PER DETAIL 5/M700 AND AS DETAILED IN THE ARCHITECTURAL AND STRUCTURAL DRAWINGS. INSTALL GREASE VIROGUARD SYSTEM FURNISHED BY CHIPOTLE ON EXHAUST FAN, EF-1.
24. PROVIDE SUPPLY DIFFUSER CONNECTION TO SUPPLY SYSTEM PER DETAIL 1/M700. TYPICAL.
25. PROVIDE AUDIO/VISUAL REMOTE SMOKE DETECTOR ANNUNCIATOR WITH REMOTE KEY OPERATED RESET. WIRE A UNIT BACK TO EACH SMOKE DETECTOR. MOUNT UNIT 60" AFF. TYPICAL.
26. INSTALL REME HALO AIR PURIFIER FURNISHED BY TUV IN RTU PER DETAIL 6/M700. SEE ELECTRICAL DRAWINGS FOR POWER CONNECTION INFORMATION. INSTALL UV WARNING STICKERS ON FACE OF ENCLOSURE PER DETAIL AND ON ANY RTU ACCESS DOOR(S) THROUGH WHICH THE REME HALO WOULD BE VISIBLE IF OPENED.
27. MAINTAIN 10' CLEARANCE BETWEEN WATER HEATER FLUE TERMINATION AND OUTSIDE AIR INTAKES. MAINTAIN 10' CLEARANCE BETWEEN WATER HEATER COMBUSTION AIR INTAKE AND EXHAUST FAN EF-1 DISCHARGE. SEE PLUMBING DRAWINGS FOR MORE INFORMATION ON WATER HEATER FLUE AND COMBUSTION AIR TERMINATIONS.

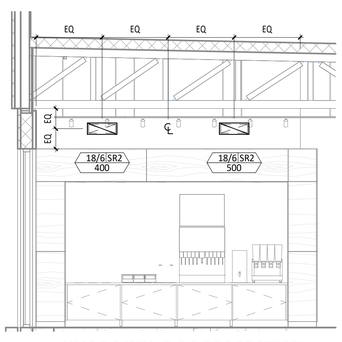

4 M100 **HVAC DINING ROOM SECTION**
1/4" = 1'-0"

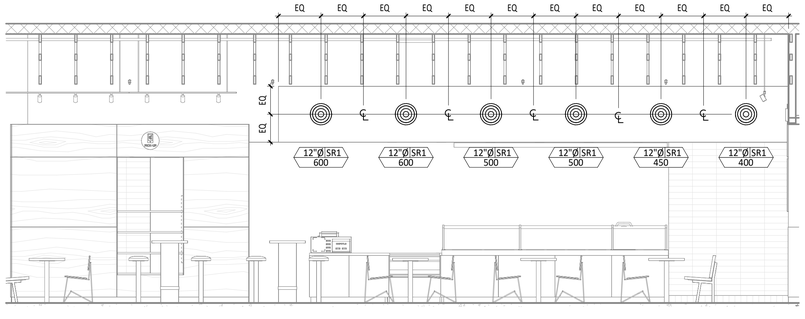

3 M100 **HVAC DINING ROOM SECTION**
1/4" = 1'-0"

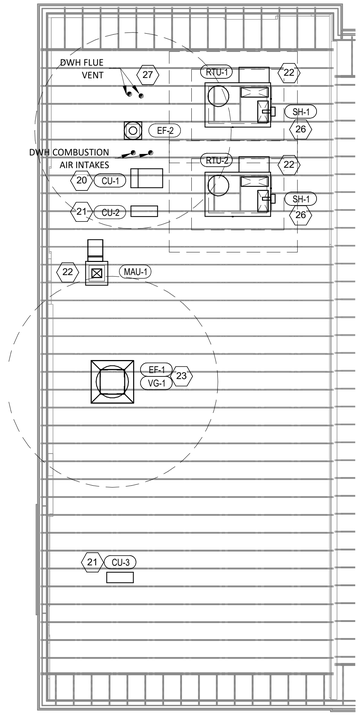

2 M100 **HVAC ROOF PLAN**
1/8" = 1'-0"

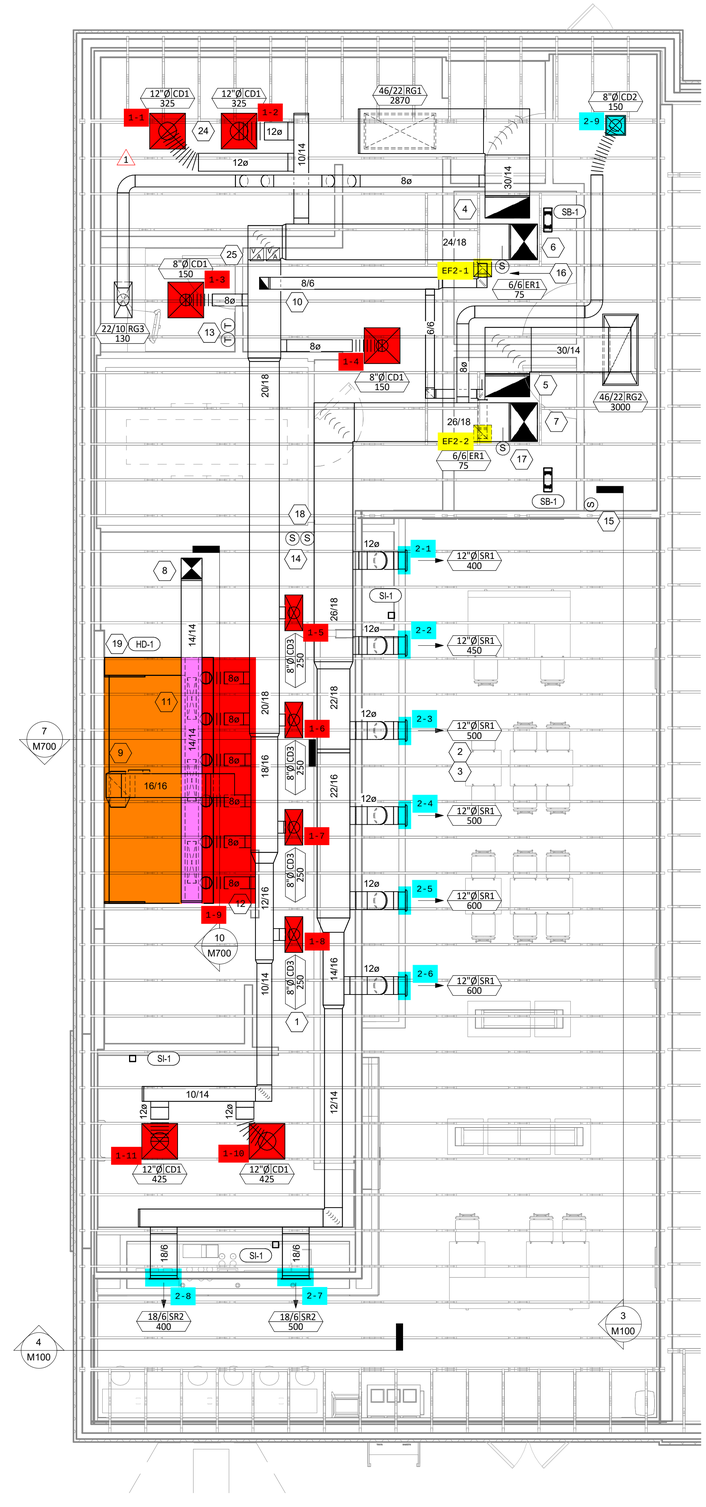

1 M100 **HVAC FLOOR PLAN**
1/4" = 1'-0"

Consultant:
NATIONAL ENGINEERING
4635 Trueman Blvd. Suite 250
Hilliard, Ohio 43026
Phone: (614) 751-9610
Fax: (614) 552-5240
Contact: Joe Jones
(614) 328-2024
jjones@nationalengineering.com

FOR CONSTRUCTION

COPYRIGHT 2025
THIS DRAWING IS AN INSTRUMENT OF SERVICE AND AS SUCH REMAINS THE PROPERTY OF CHIPOTLE MEXICAN GRILL, INC.. PERMISSION FOR USE OF THIS DOCUMENT IS LIMITED AND CAN BE EXTENDED ONLY BY WRITTEN AGREEMENT WITH CHIPOTLE MEXICAN GRILL, INC..

CHIPOTLE MEXICAN GRILL, INC.
PO BOX 182566
COLUMBUS, OH 43218-2566
TELEPHONE: (614) 318-2400
INTERNET: WWW.CHIPOTLE.COM

STORE NO.: 5083
HERITAGE & 64
7745 SR 64 E
BRADENTON, FL 34212

Issue Record:

10-02-2024	PERMIT SET
02-26-2025	BID SET
06-06-2025	CONSTRUCTION SET

Revisions:

1	12-02-2024	PERMIT COMMENTS

Drawn: JEJ
Checked: CJK

Project No. 2301099

Contents: HVAC PLAN

M100

GRILLS, REGISTERS, AND DIFFUSERS SCHEDULE

TAG	DESCRIPTION	FACE SIZE	MATERIAL	FINISH	MOUNTING	FURNISHED BY	INSTALLED BY	BASIS FOR DESIGN MANUFACTURER	BASIS FOR DESIGN MODEL	NOTES
CD1	PERFORATED CEILING DIFFUSER	24" X 24"	ALUMINUM	WHITE	LAY-IN CEILING	GC	GC	NAILOR	4320A TYPE L	PROVIDE INTEGRAL OBD
CD2	PERFORATED CEILING DIFFUSER	12" X 12"	ALUMINUM	WHITE	GYP CEILING	GC	GC	NAILOR	4320A TYPE S	PROVIDE INTEGRAL OBD, REMOVE 4-WAY DEFLECTOR
CD3	PERFORATED CEILING DIFFUSER	24" X 12"	ALUMINUM	WHITE	LAY-IN CEILING	GC	GC	NAILOR	4320A TYPE L	PROVIDE INTEGRAL OBD, REMOVE 4-WAY DEFLECTOR
ER1	PERFORATED CEILING EXHAUST	12" X 12"	ALUMINUM	WHITE	GYP CEILING	GC	GC	NAILOR	4330R TYPE S	PROVIDE INTEGRAL OBD
RG1	PERFORATED CEILING RETURN	48" X 24"	ALUMINUM	WHITE	LAY-IN CEILING	GC	GC	NAILOR	4330R TYPE L	
RG2	PERFORATED CEILING RETURN	48" X 24"	ALUMINUM	WHITE	GYP CEILING	GC	GC	NAILOR	4330R TYPE S	
RG3	PERFORATED CEILING RETURN	24" X 12"	ALUMINUM	WHITE	LAY-IN CEILING	GC	GC	NAILOR	4330R TYPE L	
SR1	ADJUSTABLE TURBO NOZZLE	SEE NECK SIZE	ALUMINUM	WHITE	WALL	GC	GC	AIR CONCEPTS	ANR-12	PROVIDE FACE-ACCESSIBLE OBD
SR2	DOUBLE DEFLECTION SUPPLY REGISTER	SEE NECK SIZE	ALUMINUM	WHITE	WALL	GC	GC	NAILOR	51DH	PROVIDE INTEGRAL OBD

1

SANITIZING EQUIPMENT SCHEDULE

TAG	COUNT	DESCRIPTION	FURNISHED BY	INSTALLED BY	BASIS FOR DESIGN MANUFACTURER	BASIS FOR DESIGN MODEL	REMARKS
SB-1	2	BATHROOM AIR PURIFICATION UNIT	TUV	GC	RGF ENVIRONMENTAL GROUP	BRU ASSEMBLY	SEE ELECTRICAL SHEETS FOR CONNECTION INFORMATION
SH-1	2	HVAC AIR PURIFICATION UNIT	TUV	GC	RGF ENVIRONMENTAL GROUP	REME-HALO	SEE DETAIL 6/M700 FOR INSTALLATION INFORMATION.
SI-1	3	ICE MACHINE TREATMENT SYSTEM	TUV	GC	RGF ENVIRONMENTAL GROUP	IMS-B-GA	SEE PLUMBING DRAWINGS FOR INSTALLATION INFORMATION.

VIROGUARD SCHEDULE

TAG	QUANITITY	DESCRIPTION	DUCT CONNECTION SIZE	FAN	FURNISHED BY	INSTALLED BY	BASIS FOR DESIGN MANUFACTURER
VG-1	1	HURRICANE RATED VIROGUARD HOOD EXHAUST FAN ROOFTOP CONTAINMENT SYSTEM	16" X 16"	CAPTIVE-AIRE DU180HFA	TDC	GC	ENVIROMATIC

FAN SCHEDULE

TAG	DRIVE TYPE	EXHAUST FLOW [CFM]	E.S.P. [in W.C.]	WEIGHT [lbs]	ELECTRICAL MOTOR POWER	ELECTRICAL V/P/H	FURNISHED BY	INSTALLED BY	BASIS FOR DESIGN MANUFACTURER	BASIS FOR DESIGN MODEL	REMARKS
EF-1	DIRECT	2550 CFM	1.20 in-wg	400	2	208/3/60	HS	GC	CAPTIVE-AIRE	DU180HFA	FURNISHED WITH DISCONNECT AND VENTED ROOF CURB
EF-2	DIRECT	150 CFM	0.60 in-wg	100	0.18 HP	120/1/60	HS	GC	CAPTIVE-AIRE	DR12HFA	FURNISHED WITH DISCONNECT, VARIABLE SPEED CONTROLLER, BACKDRAFT DAMPER AND ROOF CURB

AIR BALANCE SCHEDULE

Tag	Supply Flow [CFM]	Return Flow [CFM]	Exhaust Flow [CFM]	Subtotal [CFM]
EF-1	0	0	2550	-2550
EF-2	0	0	150	-150
MAU-1	1300	0	0	1300
RTU-1	3500	3000	0	500
RTU-2	4000	3000	0	1000
Net Pressurization [CFM]				100

MAKEUP AIR UNIT SCHEDULE

TAG	DESCRIPTION	AIRFLOW SUPPLY FLOW [CFM]	AIRFLOW E.S.P. [in. W.C.]	APPROXIMATE WEIGHT [lbs]	ELECTRICAL MOTOR POWER	ELECTRICAL V/P/H	FURNISHED BY	INSTALLED BY	BASIS FOR DESIGN MANUFACTURER	BASIS FOR DESIGN MODEL	REMARKS
MAU-1	UNTEMPERED MAKEUP AIR UNIT	1300	0.80	350	1 HP	208/3/60	THS	GC	CAPTIVE-AIRE	A1-G10	FURNISHED WITH DISCONNECT, ROOF CURB, SCREEN INTAKE, AND WASHABLE ALUMINUM FILTERS

CONTROL FUNCTIONS

A. THE MAIN COOKING EXHAUST FAN AND MAKE-UP AIR UNIT SHALL BE INTERLOCKED TO OPERATE TOGETHER. THIS CONTROL CIRCUIT IS ACTIVATED BY A SWITCH AND INCLUDES A FIRE PROTECTION OVERRIDE.
B. THE TEMPERATURE IN EACH ZONE IS CONTROLLED BY SPACE TEMPERATURE SENSORS CONNECTED TO THE THERMOSTATS LOCATED IN THE OFFICE. ALL ZONES SHALL OPERATE WITH CONTINUOUS FAN OPERATION DURING OCCUPIED TIMES AND INTERMITTENTLY AS NEEDED TO MAINTAIN SET POINTS DURING UNOCCUPIED TIMES. OUTSIDE AIR DAMPERS SHALL BE OPEN CONTINUOUSLY WHEN EITHER IN OCCUPIED MODE OR WHEN THE HOOD SYSTEM IS ON AND SHALL BE CLOSED DURING UNOCCUPIED PERIODS.
C. THE THERMOSTATS SHALL DETERMINE OCCUPIED/UNOCCUPIED STATUS BASED ON THE SCHEDULE IN THE ENERGY MANAGEMENT SYSTEM.

CONDENSING UNIT SCHEDULE

TAG	DESCRIPTION	NOMINAL CAPACITY [TONS]	NUMBER OF COMPRESSORS	NUMBER OF CIRCUITS	REFRIGERANT TYPE	REFRIGERANT CHARGE	WEIGHT	ELECTRICAL MOCP	ELECTRICAL FLA	ELECTRICAL V/P/H	FURNISHED BY	INSTALLED BY	BASIS FOR DESIGN MANUFACTURER	BASIS FOR DESIGN MODEL	REMARKS
CU-1	WALK-IN COOLER REMOTE CONDENSING UNIT	--	1	1	R-448A	9.9	200	15 A	7.2 A	208/3/60	WCS	GC	EVERIDGE	RFO130E4SEA	FURNISHED WITH WALK-IN COOLER
CU-2	ICE MAKER - REMOTE CONDENSER	--	0	1	R-404A	11 lbs 7.4 oz	100			120/1/60	KES	GC	-	-	FURNISHED WITH ICE MAKER
CU-3	ICE MAKER - REMOTE CONDENSER	--	0	1	R-404A	11 lbs 7.4 oz	100			120/1/60	KES	GC	-	-	FURNISHED WITH ICE MAKER

KITCHEN HOOD SCHEDULE

TAG	DESCRIPTION	MAX COOKING TEMP.	EXHAUST PLENUM AIRFLOW [CFM]	EXHAUST PLENUM SP [in. W.C]	DUCT COLLARS NO.	DUCT COLLARS WIDTH	DUCT COLLARS LENGTH	EXHAUST PLENUM LENGTH	EXHAUST PLENUM WIDTH	PERFORATED SUPPLY PLENUMS SP [in. W.C.]	SUPPLY PLENUM LENGTH	SUPPLY PLENUM WIDTH	MAU PLENUM AIRFLOW [CFM]	MAU DUCT COLLARS N0.	MAU DUCT COLLARS WIDTH	MAU DUCT COLLARS LENGTH	AC PLENUM AIRFLOW [CFM]	AC DUCT COLLARS N0.	AC DUCT COLLARS DIAMETER	NUMBER OF LIGHT FIXTURES	APPROXIMATE WEIGHT [lbs]	FURNISHED BY	INSTALLED BY	BASIS FOR DESIGN MANUFACTURER	BASIS FOR DESIGN MODEL	REMARKS
HD-1	TYPE I CANOPY HOOD WITH PERFORATED MAU AND AC SUPPLY PLENUMS	600"F	2550	0.97	1	10"	24"	12' - 9"	4' - 3"	0.1	13' - 9"	19"	1300	3	6"	28"	700	6	8"	8	1100	HS	GC	CAPTIVE-AIRE	5424 ND-2-ACPSP-F	MAT'L: 18 GA. TYPE 430 SS. PROVIDE WITH VERTICAL END PANELS, 16" TALL HE SS FILTERS, INTEGRAL UTILITY CABINET, KITCHEN EXHAUST SUPPRESSION SYSTEM, DUCT COLLAR TEMPERATURE SENSOR, PREWIRE PACKAGE, SPARE FIRE SYSTEM DRY CONTACT, AND 4-POLE 20A CONTACTOR

ROOFTOP UNIT SCHEDULE

TAG	DESCRIPTION	NOMINAL CAPACITY [TONS]	EER	AIRFLOW TOTAL [CFM]	AIRFLOW OA [CFM]	AIRFLOW ESP [IN. W.C.]	NET COOLING CAPACITY TOTAL [MBH]	NET COOLING CAPACITY SENSIBLE [MBH]	EAT [DEG. F] DB	EAT [DEG. F] WB	COND. EAT [DEG. F]	HEATING CAPACITY INPUT [MBH]	HEATING CAPACITY OUTPUT [MBH]	HEATING CAPACITY EAT [DEG. F]	# OF COMPRESSORS	# OF CIRCUITS	REFRIG. TYPE	REFRIG. CHARGE	APPROX. WEIGHT [lbs]	ELECTRICAL MOCP	ELECTRICAL FLA	ELECTRICAL V/P/H	FURNISHED BY	INSTALLED BY	BASIS FOR DESIGN MANUFACTURER	BASIS FOR DESIGN MODEL	REMARKS
RTU-1	KITCHEN ROOFTOP UNIT	10	12	3500	500	0.8	121	69	76	67	92	180	148	65	2	2	R-454B	25.6	1500	60 A	45.0 A	208/3/60	HES	GC	CARRIER	48FC_N12	FURNISHED WITH COATED COILS, HINGED ACCESS PANELS, STANDARD ECONOMIZER W/ DUAL ENTHALPY CONTROLS, BAROMETRIC RELIEF, SUP. SMOKE DETECTOR W/ REMOTE KEYED ANNUNCIATOR/RESET, MERV-8 FILTERS, CURB, HAIL GUARD, DISCONNECT, & UNIT-MOUNTED NON-POWERED CONVENIENCE RECEPTACLE
RTU-2	DINING ROOM ROOFTOP UNIT	10	12	4000	1000	0.8	128	65	78	71	92	180	148	62	2	2	R-454B	25.6	1500	70 A	54.0 A	208/3/60	HES	GC	CARRIER	48FC_N12	FURNISHED WITH COATED COILS, HINGED ACCESS PANELS, STANDARD ECONOMIZER W/ DUAL ENTHALPY CONTROLS, BAROMETRIC RELIEF, SUP. SMOKE DETECTOR W/ REMOTE KEYED ANNUNCIATOR/RESET, MERV-8 FILTERS, CURB, HAIL GUARD, DISCONNECT, & UNIT-MOUNTED NON-POWERED CONVENIENCE RECEPTACLE

Consultant:
NATIONAL ENGINEERING
4635 Trueman Blvd. Suite 250
Hilliard, Ohio 43026
Phone: (614) 751-9610
Fax: (614) 552-5240
Contact: Joe Jones
(614) 328-2024
jjones@nationalengineering.com

FOR CONSTRUCTION

COPYRIGHT 2025
THIS DRAWING IS AN INSTRUMENT OF SERVICE AND AS SUCH REMAINS THE PROPERTY OF CHIPOTLE MEXICAN GRILL, INC.. PERMISSION FOR USE OF THIS DOCUMENT IS LIMITED AND CAN BE EXTENDED ONLY BY WRITTEN AGREEMENT WITH CHIPOTLE MEXICAN GRILL, INC..

CHIPOTLE MEXICAN GRILL, INC.
PO BOX 182566
COLUMBUS, OH 43218-2566
TELEPHONE: (614) 318-2400
INTERNET: WWW.CHIPOTLE.COM

STORE NO. : 5083
HERITAGE & 64
7745 SR 64 E
BRADENTON, FL 34212

Issue Record:

10-02-2024	PERMIT SET
02-26-2025	BID SET
06-06-2025	CONSTRUCTION SET

Revisions:

1	12-02-2024	PERMIT COMMENTS

Drawn: JEJ
Checked: CJK

Project No. 2301099

Contents: HVAC SCHEDULES

M600

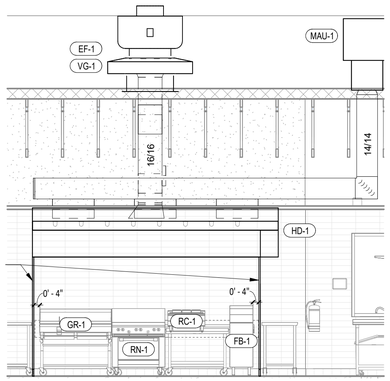

INSTALL VERTICAL END PANELS AT EACH END OF HOOD AS SHOWN. HOOD IS UL-LISTED FOR 0" OVERHANG WHEN USED WITH VERTICAL END PANELS.

10 / M700 HOOD ELEVATION

1/4" = 1'-0"

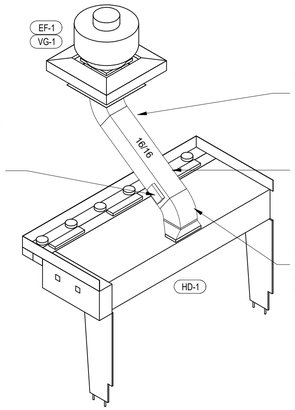

GREASE DUCT CLEANOUTS SHALL BE UL-LISTED DUCTMATE PREINSULATED CLEANOUT DOORS MODEL D128ULWSBI FOR DUCTS AT LEAST 17" TALL AND DW128ULWSBI FOR DUCTS LESS THAN 17" TALL. CLEANOUTS SHALL BE FURNISHED BY TENANT. COORDINATE NUMBER AND SIZE REQUIRED WITH ENVIROMATIC. INSTALL AS SHOWN IN THE HVAC FLOOR PLAN.

PROVIDE FIRE RESISTANT INSULATION ON TYPE I HOOD EXHAUST DUCT FROM CONNECTION TO HOOD TO CONNECTION TO EXHAUST FAN PER DETAIL 3/M700.

SLOPE HORIZONTAL GREASE DUCT A MINIMUM OF 1/4" PER FOOT DOWN TOWARD THE CONNECTION TO THE HOOD.

PROVIDE RADIUSED ELBOWS WITH AN INSIDE RADIUS OF 0.5 X THE DUCT DIMENSION AT ALL CHANGES OF DIRECTION IN THE TYPE I HOOD EXHAUST DUCT.

8 / M700 HOOD EXHAUST ISOMETRIC

N.T.S.

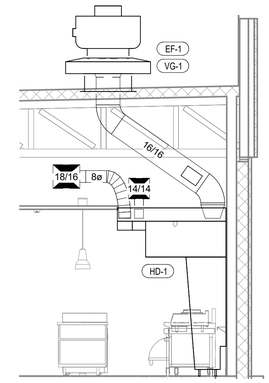

7 / M700 DUCT SECTION AT HOOD

1/4" = 1'-0"

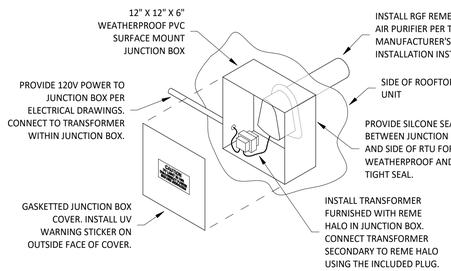

INSTALLATION LOCATION

INSTALL AIR PURIFIER WITH JUNCTION BOX ON OUTSIDE FACE OF ROOFTOP UNIT AND WITH UV LAMP TUBE EXTENDING INTO THE INTERIOR OF THE ROOFTOP UNIT. FIELD VERIFY EXACT LOCATION TO AVOID DAMAGING, TOUCHING, OR INTERFERING WITH ANY RTU INTERIOR COMPONENTS. INSTALLATION LOCATION SHALL BE AS FOLLOWS:

TRANE: INSTALL INTO THE SUPPLY AIR STREAM THROUGH THE REMOVABLE PANEL COVERING THE HORIZONTAL DISCHARGE SUPPLY AIR OPENING.

YORK: INSTALL INTO THE SUPPLY AIR PLENUM FROM THE BACK SIDE OF THE UNIT JUST ABOVE THE HEAT EXCHANGER.

6 / M700 UV AIR PURIFIER INSTALLATION

N.T.S.

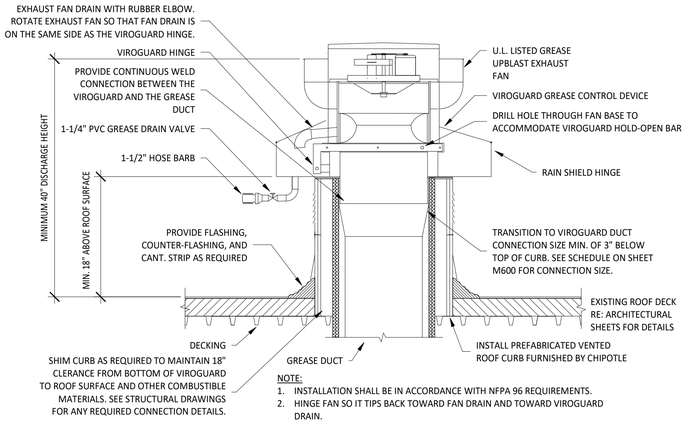

NOTE:
1. INSTALLATION SHALL BE IN ACCORDANCE WITH NFPA 96 REQUIREMENTS.
2. HINGE FAN SO IT TIPS BACK TOWARD FAN DRAIN AND TOWARD VIROGUARD DRAIN.

5 / M700 GREASE EXHAUST FAN

N.T.S.

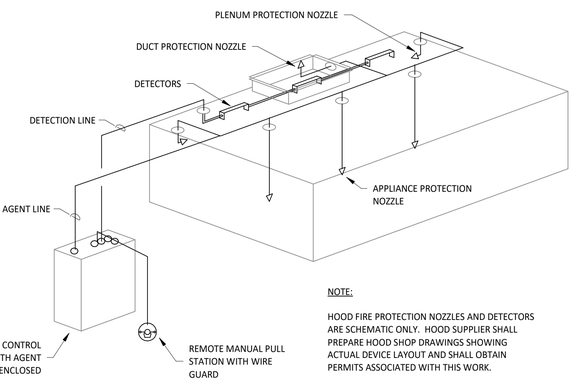

NOTE:

HOOD FIRE PROTECTION NOZZLES AND DETECTORS ARE SCHEMATIC ONLY. HOOD SUPPLIER SHALL PREPARE HOOD SHOP DRAWINGS SHOWING ACTUAL DEVICE LAYOUT AND SHALL OBTAIN PERMITS ASSOCIATED WITH THIS WORK.

4 / M700 FIRE SUPPRESSION SYSTEM SCHEMATIC

N.T.S.

FIRE RATED ENCLOSURE - GREASE DUCTS

1. THERMAL CERAMICS FIREMASTER FASTWRAP XL IS TESTED TO ASTM E2336 AND UL LISTED PER HNKT.G18 TO PROVIDE ZERO CLEARANCE TO COMBUSTIBLES AND TO PROVIDE A 1- OR 2-HOUR ENCLOSURE. THROUGH PENETRATIONS FIRESTOP SYSTEMS ARE TESTED IN ACCORDANCE WITH ASTM E 814 (UL 1479). ICC CODE EVALUATION PER REPORT UL ER 14229-01.
2. COMPLIANT TO THE FOLLOWING CODES:
   - NFPA 96
   - INTERNATIONAL MECHANICAL CODES
   - UNIFORM MECHANICAL CODE.
   - CALIFORNIA MECHANICAL CODE
3. INSULATION APPLIED IN TWO LAYERS WITH TIGHT COMPRESSION JOINT ON BOTH LAYERS AT ALL JOINTS.
4. MINIMUM 16 GAUGE CARBON STEEL (OR 18 GAGE STAINLESS STEEL) RECTANGULAR OR ROUND GREASE EXHAUST DUCT
5. INSTALL UL LISTED AND LIQUID TIGHT THERMAL CERAMICS FASTDOOR XL ACCESS DOORS, OR ALTERNATE DOOR UL LISTED PER UL1978, AT ALL CHANGES IN DIRECTION AND AT MINIMUM EVERY 20 FT ON HORIZONTAL RUNS.
6. SUPPORT HANGER SYSTEMS DO NOT NEED TO BE WRAPPED PROVIDED THE HANGER RODS ARE MINIMUM OF 3/8 IN. DIAMETER AND SUPPORTS ARE MINIMUM 2 X 2 X 1/8 IN. STEEL ANGLE OR SMACNA EQUIVALENT SUPPORT SYSTEM.
7. THERMAL CERAMICS DUCT WRAP SHALL BE INSTALLED DIRECTLY ONTO THE DUCT AND APPLIED FROM THE HOOD CONNECTION TO THE CONNECTION TO THE FAN.
8. THERMAL CERAMICS DUCT ENCLOSURE SYSTEM SHALL BE INSTALLED IN STRICT ACCORDANCE WITH MANUFACTURERS INSTRUCTIONS AND UL LISTINGS.

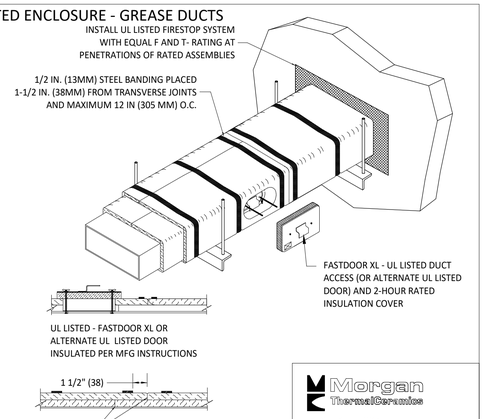

Morgan Thermal Ceramics
P.O. Box 923
Augusta, Georgia 30903-0923
Phone: (706) 560-4038

3 / M700 FIREMASTER DUCT WRAP - UL HNKT-G18

N.T.S.

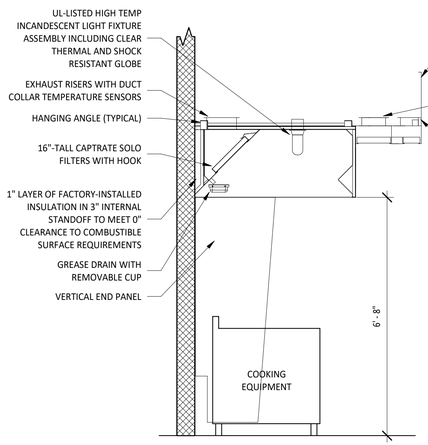

2 / M700 HOOD SECTION VIEW

N.T.S.

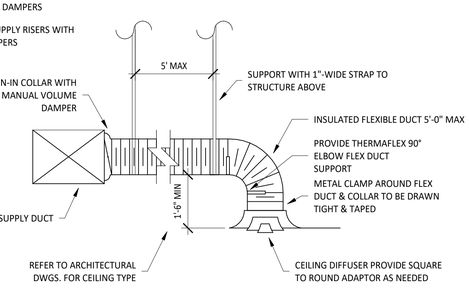

NOTE:
1. METHOD OF INSTALLATION FOR AIRTIGHT SEAL IS TYPICAL FOR ALL FLEX CONNECTIONS TO AIR DISTRIBUTION DEVICES.

1 / M700 DIFFUSER CONNECTION

N.T.S.

Consultant:
NATIONAL ENGINEERING
4635 Trueman Blvd. Suite 250
Hilliard, Ohio 43026
Phone: (614) 751-9610
Fax: (614) 552-5240
Contact: Joe Jones
(614) 328-2024
jjones@nationalengineering.com

FOR CONSTRUCTION

COPYRIGHT 2025
THIS DRAWING IS AN INSTRUMENT OF SERVICE AND AS SUCH REMAINS THE PROPERTY OF CHIPOTLE MEXICAN GRILL, INC.. PERMISSION FOR USE OF THIS DOCUMENT IS LIMITED AND CAN BE EXTENDED ONLY BY WRITTEN AGREEMENT WITH CHIPOTLE MEXICAN GRILL, INC..

CHIPOTLE MEXICAN GRILL, INC.
PO BOX 182566
COLUMBUS, OH 43218-2566
TELEPHONE: (614) 318-2400
INTERNET: WWW.CHIPOTLE.COM

STORE NO.: 5083
HERITAGE & 64
7745 SR 64 E
BRADENTON, FL 34212

Issue Record:

10-02-2024	PERMIT SET
02-26-2025	BID SET
06-06-2025	CONSTRUCTION SET

Revisions:

Drawn: JEJ
Checked: CJK

Project No. 2301099

Contents: HVAC DETAILS

M700