Pepper Construction

Middletown Fire Station 83

Pepper Job No. 2301497

Submittal: 83-233450-002

Type: Shop Drawings

Residential Range Hood

Pepper Construction
Tomorrow Transformed

- [x] REVIEWED FOR APPROVAL
- [ ] REVIEWED AS NOTED FOR APPROVAL
- [ ] FOR RECORD

Review of this shop drawing does not relieve the Architect, Engineer or Subcontractor of their contractual design responsibilities. Pepper Construction's review is not, nor is it responsible for, an engineering or architectural analysis of design elements, load or dimension calculations, or similar matters. The Subcontractor is responsible to furnish additional material or work as required by the Contract and review of these documents, as well as dimensions to be confirmed and correlated at the job site.

JOB: 2301497 **BY:** clewis **DATE:** 4/11/2024

SUBMITTAL# 83-233450-002 **Rev #** 0

REFER TO PAGE 5 FOR COMMENT.
NZ 4/12/24

- [ ] REVIEWED
- [x] REVIEWED AS NOTED
- [ ] REVISE & RESUBMIT

REVIEWED FOR GENERAL CONFORMANCE WITH CONTRACT DOCUMENT CONCEPTS ONLY. THE CONTRACTOR IS RESPONSIBLE FOR:

COORDINATING EQUIPMENT DIMENSIONS WITH ACTUAL FIELD CONDITIONS TO INSURE FIT FOR INSTALLATION, MAINTENANCE AND CODE CLEARANCES

COORDINATING/VERIFYING SERVICE CONNECTIONS AND CAPACITIES

PERFORMING INSTALLATION IN ACCORDANCE WITH CONTRACT DOCUMENTS AND EQUIPMENT MANUFACTURERS REQUIREMENTS

PROVIDING MISCELLANEOUS APPURTENANCES FOR COMPLETE, FUNCTIONAL OPERATION

BY: David Zelinski DATE: 04/12/2024
NAUMAN & ZELINSKI LLC

FOR QUESTIONS, CALL THE
Western OH Mechanical
REGION 133
PHONE: (513) 275-4986
EMAIL: reg133@captiveaire.com

HOOD INFORMATION – JOB#6084821

HOOD NO	TAG	MODEL	MANUFACTURER	LENGTH	MAX COOKING TEMP	TYPE	APPLIANCE DUTY	DESIGN CFM/FT	TOTAL EXH CFM	EXHAUST PLENUM RISER(S) WIDTH	LENG	HEIGHT	DIA	CFM	VEL	SP	HOOD CONSTRUCTION	HOOD CONFIG END TO END	ROW
1	HOOD	2424 WRH	CAPTIVEAIRE	5' 0"	450 DEG	R	MEDIUM	150	750			4"	10"	750	1375	-0.470"	430 SS 100%	ALONE	ALONE

HOOD INFORMATION

HOOD NO	TAG	FILTER(S) TYPE	QTY	HEIGHT	LENGTH	EFFICIENCY @ 7 MICRONS	LIGHT(S) QTY	TYPE	WIRE GUARD	UTILITY CABINET(S) LOCATION	SIZE	FIRE SYSTEM TYPE	SIZE	ELECTRICAL MODEL #	SWITCHES QUANTITY	FIRE SYSTEM PIPING	HOOD HANGING WEIGHT
1	HOOD	CAPTRATE SOLO FILTER	3	16"	16"	85% SEE FILTER SPEC	4	RECESSED ROUND	NO							YES	250 LBS

HOOD OPTIONS

HOOD NO	TAG	OPTION
1	HOOD	BACKSPLASH 54.00" HIGH X 60.00" LONG 430 SS VERTICAL.
		RESIDENTIAL HOOD STD WRAPPER - FRONT, LEFT, RIGHT.

DUCTWORK INSTALLATION

DUCTWORK IS REQUIRED TO CARRY SMOKE AND EXHAUST AWAY FROM THE APPLIANCES AND SPACE. DUCT SHOULD BE CONSTRUCTED OF SHEET METAL (26 GAUGE MINIMUM) THAT IS GALVANIZED STEEL, STAINLESS STEEL, ALUMINUM OR COPPER. DUCTS MUST HAVE A SMOOTH INNER WALL, BE AIR TIGHT, AND EQUIPPED WITH BACKDRAFT DAMPER. KEEP TRANSITIONS AND TURNS IN DUCT MINIMAL TO PREVENT SYSTEM EFFECT, THIS WILL DRASTICALLY INCREASE THE STATIC PRESSURE AND REDUCE AIRFLOW. DUCTWORK MUST BE INDEPENDENT FROM OTHER EXHAUST DUCTS. VERIFY LOCAL CODE AND JURISDICTION REQUIREMENTS FOR WHAT TYPE OF DUCTWORK MUST BE INSTALLED. HOOD COMES WITH FACTORY INSTALLED 10" ROUND, 4" TALL FLANGED RISER. DUCTWORK IS TO BE PROVIDED BY OTHERS IN THE FIELD.

DUCTWORK MUST BE INSTALLED BY QUALIFIED INSTALLATION TECHNICIAN. ALWAYS FOLLOW MANUFACTURER'S INSTALLATION INSTRUCTIONS AND RECOMMENDATIONS. IF INSTRUCTIONS ARE NOT PROVIDED, FOLLOW SMACNA GUIDES AND RECOMMENDATIONS FOR DUCTWORK CONSTRUCTION.

CAPTIVEAIRE SYSTEMS RECOMMENDS THE USE OF LISTED, PRE-FABRICATED ROUND GREASE EXHAUST DUCT TO REDUCE STATIC PRESSURE IN THE SYSTEM, MINIMIZE INSTALLATION AND INSPECTION TIMES, AND ENSURE DUCT IS LIQUID TIGHT

HVAC DISTRIBUTION NOTE

HIGH VELOCITY DIFFUSERS OR HVAC RETURNS SHOULD NOT BE PLACED WITHIN TEN (10) FEET OF THE EXHAUST HOOD. PERFORATED DIFFUSERS ARE RECOMMENDED.

VERIFY CEILING HEIGHT

___' - ___"

HEIGHT REQUIRED TO VERIFY THAT HOOD FITS SPACE AND TO SIZE THE ENCLOSURE PANELS

CUSTOMER APPROVAL TO MANUFACTURE:

APPROVED AS NOTED ☐
APPROVED WITH NO EXCEPTION TAKEN ☐
REVISE AND RESUBMIT ☐
SIGNATURE _____
YOUR TITLE _____ DATE _____ _____

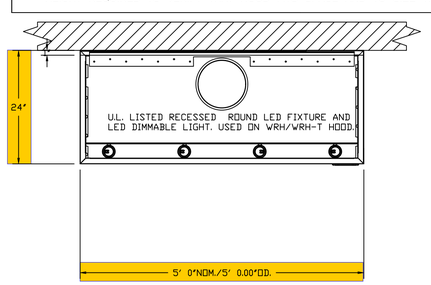

PLAN VIEW – HOOD #1 (HOOD)
5' 0.00" LONG 2424WRH

SPECIFICATION: CAPTRATE• GREASE-STOP• SOLO FILTER

THE CAPTRATE GREASE-STOP SOLO FILTER IS A SINGLE-STAGE FILTER FEATURING A UNIQUE S-BAFFLE DESIGN IN CONJUNCTION WITH A SLOTTED REAR BAFFLE DESIGN, TO DELIVER EXCEPTIONAL FILTRATION EFFICIENCY.

FILTER IS STAINLESS STEEL CONSTRUCTION, AND SIZED TO FIT INTO STANDARD 2-INCH DEEP HOOD CHANNEL(S).

UNITS SHALL INCLUDE STAINLESS STEEL HANDLES AND A FASTENING DEVICE TO SECURE THE TWO COMPONENTS WHEN ASSEMBLED.

GREASE EXTRACTION EFFICIENCY PERFORMANCE SHALL REMOVE AT LEAST 75% OF GREASE PARTICLES FIVE MICRONS IN SIZE, AND 85% GREASE PARTICLES SEVEN MICRONS IN SIZE AND LARGER, WITH A CORRESPONDING PRESSURE DROP NOT TO EXCEED 1.0 INCHES OF WATER GAUGE.

THE CAPTRATE GREASE-STOP SOLO WAS TESTED TO ASTM STANDARD ASTM F2519-05. MANUFACTURER APPROVED FOR USE IN SOLID FUEL APPLICATIONS AS A SPARK ARRESTER.

EFFICIENCY VS. PARTICLE DIAMETER

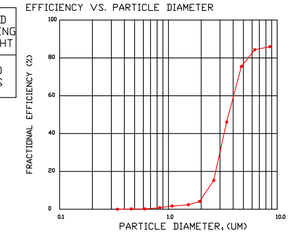

PRESSURE DROP VS. FLOW RATE

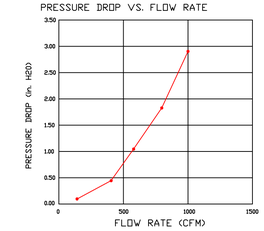

CAPTRATE FILTERS ARE BUILT IN COMPLIANCE WITH:
NFPA #96.
NSF STANDARD #2.
UL STANDARD #1046.
INT. MECH. CODE (IMC).
ULC-S649.

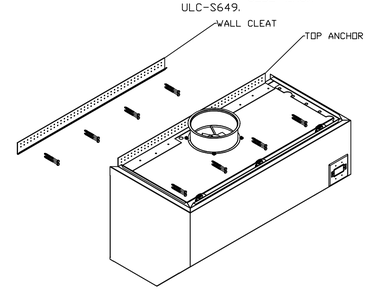

MOUNTING HARDWARE

1. FASTENER

MOUNTING INSTRUCTIONS

WALL RESIDENTIAL HOOD MUST BE SECURED TO WALL USING BOTH TOP ANCHOR AND WALL CLEAT.
MARK LOCATIONS FOR WALL CLEAT ON WALL. DRILL PILOT HOLES FOR FASTENERS.
AFTER INSTALLATION OF WALL CLEAT ON WALL, MOUNT HOOD ON WALL CLEAT.
USE FASTENERS THROUGH TOP ANCHOR TO DRAW HOOD CLOSER TO THE WALL AND SECURE HOOD TO WALL.
A. WHEN INSTALLING INTO CONCRETE/MASONRY WALL, USE 3/16" x 3-1/4" SCREW, #90161A631.
B. WHEN INSTALLING INTO METAL STUDS, USE #10 x 3" SELF DRILLING SCREWS, #90064A464.
C. WHEN INSTALLING INTO WOODEN STUDS, USE #9 x 3" SCREWS, #90250A234.
D. WHEN FASTENER LANDS ONLY ON DRYWALL, USE 3/16" x 3" LONG TOGGLE BOLTS, #97121A019.

FASTENERS ARE INCLUDED IN WRH INSTALLATION KIT SHIPPED WITH THE HOOD

NOTE:

WALL RESIDENTIAL HOODS 30" AND 36" LONG, MUST USE TWO (2) STUDS MINIMUM, FASTENED WITH TOP ANCHOR AND WALL CLEAT OF WALL RESIDENTIAL HOOD.

WALL RESIDENTIAL HOODS 48" TO 72" LONG, MUST USE THREE (3) STUDS MINIMUM, FASTENED WITH TOP ANCHOR AND WALL CLEAT OF WALL RESIDENTIAL HOOD.

WALL RESIDENTIAL HOOD IS INTENDED FOR INSTALLATION OVER RESIDENTIAL APPLIANCES ONLY.

REVISIONS

DESCRIPTION	DATE:

CAPTIVEAIRE
www.captiveaire.com

Western OH Mechanical
, Cincinnati, OH, 45258 PHONE: (513) 275-4986 FAX: 9195168748 EMAIL: reg133@captiveaire.com

Middletown Fire Station No 83 WRH R1 BID
FRANKLIN, OH, 45005

DATE: 6/29/2023
DWG.#: 6084821
DRAWN BY: grant.homan
SCALE: 3/4" = 1'-0"
MASTER DRAWING
SHEET NO. 1

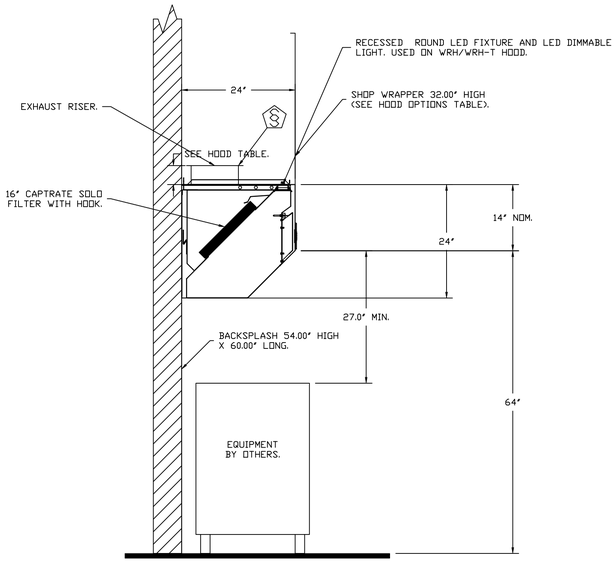

SECTION VIEW – MODEL 2424WRH HOOD – #1 (HOOD)

BACKSPLASH

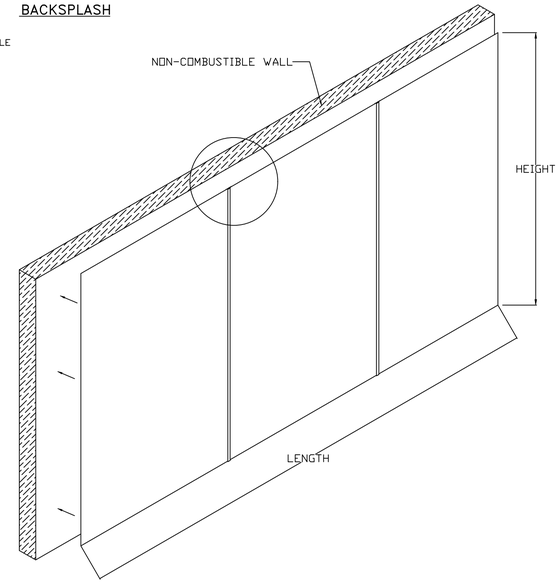

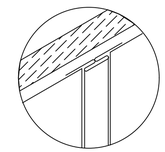

BACKSPLASH PANELS SLIDE INTO DIVIDER BAR

- BACKSPLASH IS NOT INSULATED AND IS UNSUITABLE FOR INSTALL AGAINST COMBUSTIBLE WALLS

REVISIONS

DESCRIPTION	DATE:

CAPTIVEAIRE

www.captiveaire.com

Western OH Mechanical

, Cincinnati, OH, 45258 PHONE: (513) 275-4986 FAX: 9195168748 EMAIL: reg133@captiveaire.com

Middletown Fire Station No 83 WRH R1 BID

FRANKLIN, OH, 45005

DATE: 6/29/2023

DWG.#: 6084821

DRAWN BY: grant.homan

SCALE: 3/4" = 1'-0"

MASTER DRAWING

SHEET NO. 2

FIRE SYSTEM INFORMATION – JOB#6084821

FIRE SYSTEM NO	TAG	TYPE	SIZE	FLOW POINTS	INSTALLATION	
					SYSTEM	LOCATION ON HOOD
1		RESIDENTIAL CORE	0	0	HOOD LINE LEFT	N/A

GAS VALVE(S)

FIRE SYSTEM NO	TAG	TYPE	SIZE	SUPPLIED BY
1		SC ELECTRICAL	1.000	CAPTIVEAIRE SYSTEMS

FIRE SYSTEM PARTS LIST KEY

FIRE SYSTEM NO	TAG	KEY NUMBER - PART DESCRIPTION	QTY BY FACTORY	QTY BY DIST
1		0 - 0 - A0029078 JUNCTION BOX FOR RESIDENTIAL CORE PROTECTION MANUAL PULL STATION. 1.5" DEEP BACK BOX, BLUE.	1	0
		0 - 0 - CORE RESIDENTIAL MANIFOLD RESIDENTIAL CORE MANIFOLD- USED ON 1/2" RESIDENTIAL CORE MANIFOLD.	1	0
		34 - 34 - A0019852 24VDC OR 120VAC SINGLE ACTION MANUAL ACTUATION DEVICE (PUSH/PULL STATION) WITH PROTECTIVE COVER, ONE (1) NORMALLY OPEN CONTACT.	1	0
		ADDITIONAL PARTS TO BE DETERMINED…		

REVISIONS

	DESCRIPTION	DATE:
△		
△		
△		
△		

CAPTIVEAIRE
www.captiveaire.com
Western OH Mechanical
, Cincinnati, OH, 45258 PHONE: (513) 275-4986 FAX: 9195168748 EMAIL: reg133@captiveaire.com

Middletown Fire Station No 83 WRH R1 BID
FRANKLIN, OH, 45005

DATE: 6/29/2023

DWG.#: 6084821

DRAWN BY: grant.homan

SCALE: 3/4" = 1'-0"

MASTER DRAWING

SHEET NO.
3

EXHAUST FAN INFORMATION – JOB#6084821

FAN UNIT NO	TAG	QTY	FAN UNIT MODEL #	MANUFACTURER	CFM	ESP	RPM	MOTOR ENCL	HP	BHP	PHASE	VOLT	FLA	DISCHARGE VELOCITY	WEIGHT (LBS)	SONES
1	EF	1	DU33HFA	CAPTIVEAIRE	750	0.750	1616	TEAO-ECM	0.333	0.2790	1	115	4.3	371 FPM	73	18

1" E.S.P.
REQUIRED.
NZ 4/10/24

FAN OPTIONS

FAN UNIT NO	TAG	QTY	DESCRIPTION
1	EF	1	FAN BASE CERAMIC SEAL - SHIP LOOSE - FOR GREASE DUCTS
		1	I 15-BDD DAMPER
		1	ECM WIRING PACKAGE - PWM SIGNAL FROM ECPM03 PREWIRE (TELCO MOTOR), CCW ROTATION
		1	2 YEAR PARTS WARRANTY

FAN ACCESSORIES

FAN UNIT NO	TAG	EXHAUST			SUPPLY			
		GREASE CUP	GRAVITY DAMPER	WALL MOUNT	SIDE DISCHARGE	GRAVITY DAMPER	MOTORIZED DAMPER	WALL MOUNT
1	EF		YES					

CURB ASSEMBLIES

NO	ON FAN	TAG	WEIGHT	ITEM	SIZE
1	# 1	EF	34 LBS	CURB	19.500"W X 19.500"L X 24.000"H 3.000:12.000 PITCH ALONG LENGTH, RIGHT VENTED HINGED.

FAN #1 DU33HFA - EXHAUST FAN (EF)

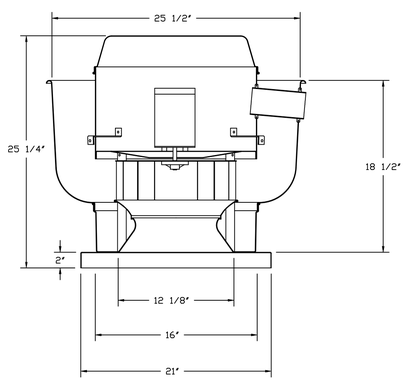

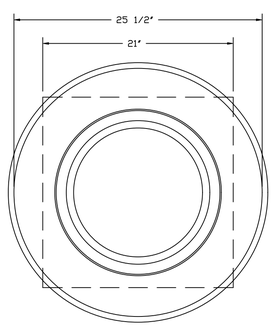

TOP VIEW

FEATURES:

- DIRECT DRIVE CONSTRUCTION (NO BELTS/PULLEYS).
- ROOF MOUNTED FANS.
- UL705.
- VARIABLE SPEED CONTROL.
- INTERNAL WIRING.
- THERMAL OVERLOAD PROTECTION (SINGLE PHASE).
- NEMA 3R SAFETY DISCONNECT SWITCH.

OPTIONS

- FAN BASE CERAMIC SEAL - SHIP LOOSE
- FOR GREASE DUCTS.
- I 15-BDD DAMPER.
- ECM WIRING PACKAGE - PWM SIGNAL FROM ECPM03 PREWIRE (TELCO MOTOR), CCW ROTATION.
- 2 YEAR PARTS WARRANTY.

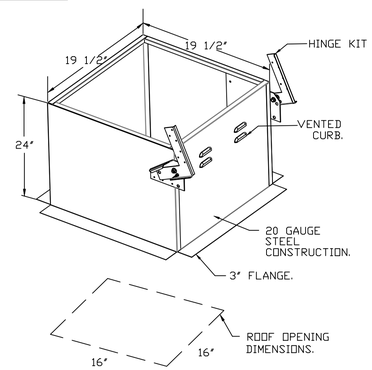

PITCHED CURBS ARE AVAILABLE FOR PITCHED ROOFS.

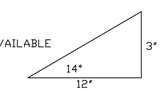

SPECIFY PITCH:
EXAMPLE: 7/12 PITCH = 30° SLOPE.

BACKDRAFT DAMPER INSTALLATION

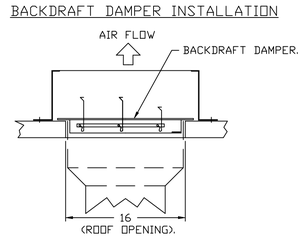

REVISIONS

DESCRIPTION	DATE:

CAPTIVEAIRE
www.captiveaire.com
Western OH Mechanical
, Cincinnati, OH, 45258 PHONE: (513) 275-4986 FAX: 9195168748 EMAIL: reg133@captiveaire.com

Middletown Fire Station No 83 WRH R1 BID
FRANKLIN, OH, 45005

DATE: 6/29/2023

DWG.#: 6084821

DRAWN BY: grant.homan

SCALE: 3/4" = 1'-0"

MASTER DRAWING

SHEET NO.
4

FAN#1 (EF) - EXHAUST PERFORMANCE CURVES.

750 CFM, 0.941 SP @ 1616 RPM AND 0.279 BHP AT 860 FEET AND 70 DEG F.

* PLEASE NOTE THAT THESE CURVES WERE ADJUSTED FOR JOB SPECIFIC TEMPERATURE AND ALTITUDE.

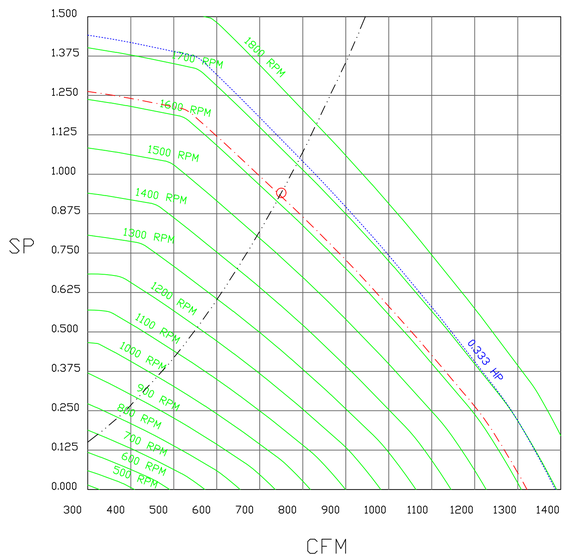

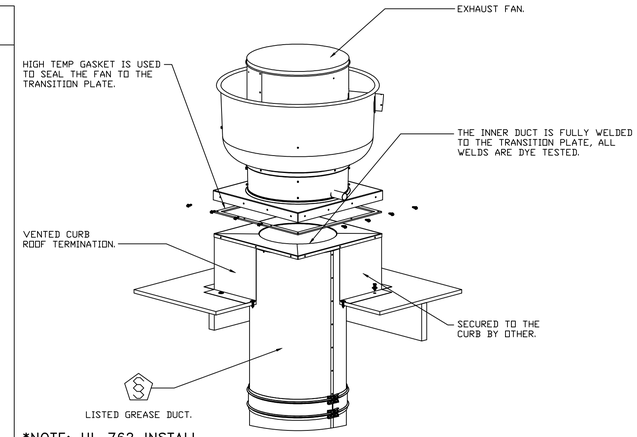

*NOTE: UL 762 INSTALL.

GREASE DUCT & CHIMNEY SPECIFICATIONS:
PROVIDE GREASE DUCT EQUAL TO CAPTIVEAIRE SYSTEMS MODEL "DW" ROUND 20 GAUGE 430 STAINLESS STEEL DUCTWORK. MODEL "DW" IS LISTED TO UL-1978 AND IS INSTALLED USING "V" CLAMP LOCKING CONNECTIONS SEALED WITH 3M FIRE BARRIER 2000 PLUS. MODEL "DW" DOES NOT REQUIRE WELDING PROVIDING IT HAS BEEN INSTALLED PER THE MANUFACTURES INSTALLATION GUIDE.
PROVIDE RATED ACCESS DOORS AT EVERY CHANGE IN DIRECTION AND EVERY 12' ON CENTER.
PER MANUFACTURES LISTING MODEL "DW" HORIZONTAL RUNS LESS THAN 75 FT. CAN BE SLOPED 1/16" PER 12", HORIZONTAL RUNS MORE THAN 75 FT. CAN BE SLOPED 3/16" PER 12". DUCT SHOULD BE SLOPED AS MUCH AS POSSIBLE TO REDUCE THE CHANCE OF GREASE ACCUMULATION IN HORIZONTAL RUNS.

IF THE DUCT OR CHIMNEY IS WITHIN 18 INCHES OF COMBUSTIBLE MATERIAL, PROVIDE UL-2221 OR UL-103 HT LISTED DOUBLE WALL GREASE DUCT OR DOUBLE WALL CHIMNEY EQUAL TO CAPTIVEAIRE SYSTEMS MODEL "DW- 2R, 2R TYPE HT, 3R, OR 3Z" ROUND 20 GAUGE 430 STAINLESS INNER DUCT INSULATED WITH A 24 GAUGE 430 STAINLESS OUTER SHELL.

CUSTOMER APPROVAL TO MANUFACTURE:

APPROVED AS NOTED ☐
APPROVED WITH NO EXCEPTION TAKEN ☐
REVISE AND RESUBMIT ☐
SIGNATURE _____
YOUR TITLE _____ DATE _____

REVISIONS

DESCRIPTION	DATE:

CAPTIVEAIRE
www.captiveaire.com
Western OH Mechanical
, Cincinnati, OH, 45258 PHONE: (513) 275-4986 FAX: 9195168748 EMAIL: reg133@captiveaire.com

Middletown Fire Station No 83 WRH R1 BID
FRANKLIN, OH, 45005

DATE: 6/29/2023
DWG.#: 6084821
DRAWN BY: grant.homan
SCALE: 3/4" = 1'-0"
MASTER DRAWING

SHEET NO.
5

Exhaust Fan Wiring	JOB 6084821 - Middletown Fire Station No 83...	
DRAWING NUMBER EXH6084821-1	SHIP DATE 6/29/2023	MODEL **DU333HFA**

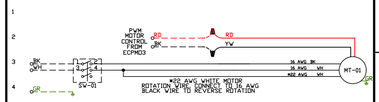

Installed Options

Component Identification

Label	Description	Location
MT-01	Fan Motor	(3)
SV-01	Main disconnect switch	(3)

MOTOR INFO

EXHAUST 0333HP-115V-1P-4.3FLA

ELECTRICAL INFORMATION

MOTOR/CTRL MCA: 10A
MOTOR/CTRL MOP: 15A

NOTES

- - - - DENOTES FIELD WIRING
——— DENOTES INTERNAL WIRING

WIRE COLOR

BK - BLACK	YW - YELLOW
BL - BLUE	GR - GREEN
BR - BROWN	GY - GRAY
OR - ORANGE	PR - PURPLE
RD - RED	PK - PINK
WH - WHITE	

REVISIONS

DESCRIPTION	DATE:

CAPTIVEAIRE
www.captiveaire.com
Western OH Mechanical
, Cincinnati, OH, 45258 PHONE: (513) 275-4986 FAX: 9195168748 EMAIL: reg133@captiveaire.com

Middletown Fire Station No 83 WRH R1 BID
FRANKLIN, OH, 45005

DATE: 6/29/2023

DWG.#: 6084821

DRAWN BY: grant.homan

SCALE: 3/4" = 1'-0"

MASTER DRAWING

SHEET NO.
6

ELECTRICAL PACKAGE – JOB#6084821

NO	TAG	PACKAGE #	LOCATION	SWITCHES		OPTION	FANS CONTROLLED					
				LOCATION	QUANTITY		FAN TAG	TYPE	ϕ	HP	VOLT	FLA
1		RESIDENTIAL-HOOD	MOUNTED IN HOOD	FACE MOUNT RIGHT SIDE OF HOOD HOOD # 1	1 LIGHT 1 FAN	RESIDENTIAL HOOD	EF	EXHAUST	1	0.333	115	4.3

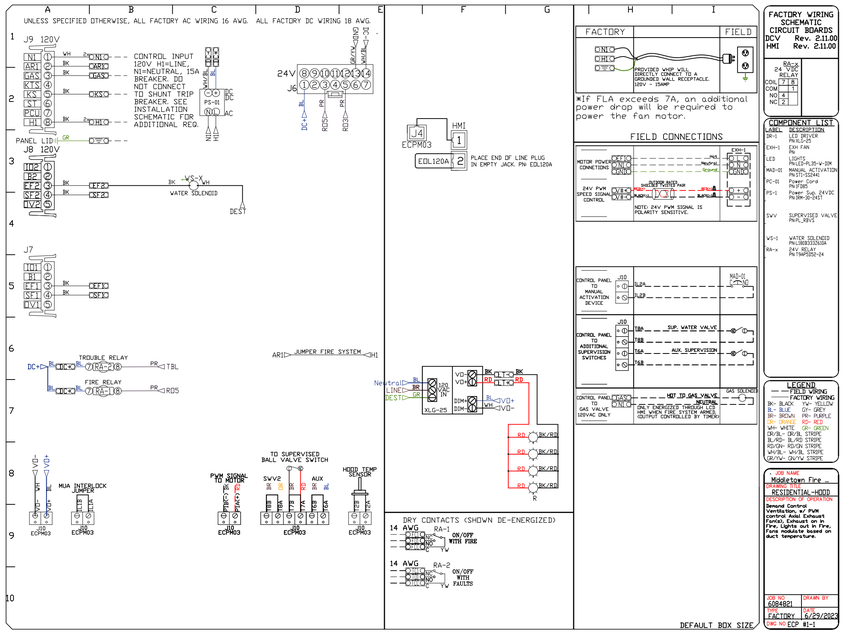

FACTORY WIRING SCHEMATIC CIRCUIT BOARDS
DCV Rev. 2.11.00
HMI Rev. 2.11.00

RA-2
24 VDC RELAY
COIL 7 8
COM 1
NO 4
NC 2

COMPONENT LIST

LABEL	DESCRIPTION
DR-1	LED DRIVER PWLF-25
EXH-1	EXHAUST FAN
LE2	LIGHT PN:LED-PL35-4-30K
MAD-01	MANUAL ACTIVATION DEVICE
PC-01	Power Cord PN:PD85
PS-1	Power Sup.24VDC PN:DRN-30-24S1
SVV	SUPERVISED VALVE PN:PL-SSV2
VS-1	WATER SOLENOID PN:3B8320S20A
RA-x	24V RELAY PN:TRN4PS24-24

LEGEND
FIELD WIRING
FACTORY WIRING
BK- BLACK YW- YELLOW
BL- BLUE GY- GREY
BR- BROWN PR- PURPLE
OR- ORANGE
WH- WHITE
GR/YL- GR/YL STRIPE
BK/BL- BK/BL STRIPE
BL/RD- BL/RD STRIPE
RD/GR- RD/GR STRIPE
WH/BL- WH/BL STRIPE
GR/YW- GR/YW STRIPE

JOB NAME
Middletown Fire
PROJECT TYPE
RESIDENTIAL-HOOD
DESIGN FOR AP OPERATION
Demand Control Ventilation for PWM control Axial Exhaust Fan(s). Exhaust on in Low Speed. Fan off. Fans modulate based on duct temperature.

JOB NO. 6084821
DRAWN BY G.J.
FACTORY 6/23/2023
PN: NO ECP R1-1

REVISIONS

	DESCRIPTION	DATE:
△		
△		
△		
△		

CAPTIVEAIRE
www.captiveaire.com
Western OH Mechanical
, Cincinnati, OH, 45258 PHONE: (513) 275-4986 FAX: 9195168748 EMAIL: reg133@captiveaire.com

Middletown Fire Station No 83 WRH R1 BID
FRANKLIN, OH, 45005

DATE: 6/29/2023
DWG.#: 6084821
DRAWN BY: grant.homan
SCALE: 3/4" = 1'-0"
MASTER DRAWING

SHEET NO.
7

DUCTWORK #1 PARTS – JOB#6084821 DOUBLE WALL

TAG	PART #	CFM	GPM	ZONE	COVEREDBY	SP	WEIGHT	VELOCITY	QTY	DESCRIPTION
P1	DW1027DWAJD-2R-S	750				-0.007	39.87	1375.10	1	DOUBLE WALL ADJUSTABLE DUCT - 10" INNER DUCT - 2 LAYERS REDUCED CLEARANCE - 14" STAINLESS STEEL OUTER SHELL. MIN LENGTH = 11" / MAX LENGTH = 25.5" / ADJUSTMENT = 14.5" / ADJUSTABLE SECTION MAY NEED TO BE CUT. INCLUDES SINGLE AND DOUBLE WALL "V" CLAMPS.
P2	DW1045DWASY-2R-S	750				-0.027	13.60	1375.10	1	DOUBLE WALL DUCT - 10" INNER 45 DUCT - 2 LAYERS REDUCED CLEARANCE - 14" STAINLESS STEEL OUTER SHELL.
P3	DW1045DWASY-2R-S	750				-0.045	13.60	1375.10	1	DOUBLE WALL DUCT - 10" INNER 45 DUCT - 2 LAYERS REDUCED CLEARANCE - 14" STAINLESS STEEL OUTER SHELL.
P4	DW1027DWAJD-2R-S	750				-0.005	39.87	1375.10	1	DOUBLE WALL ADJUSTABLE DUCT - 10" INNER DUCT - 2 LAYERS REDUCED CLEARANCE - 14" STAINLESS STEEL OUTER SHELL. MIN LENGTH = 11" / MAX LENGTH = 25.5" / ADJUSTMENT = 14.5" / ADJUSTABLE SECTION MAY NEED TO BE CUT. INCLUDES SINGLE AND DOUBLE WALL "V" CLAMPS.
P5 ASSEMBLED W/P6	DW104550DWLTTP-2R-S	750				-0.018	46.13	1375.10	1	DOUBLE WALL DUCT - 10" INNER DUCT, 45.5" LONG - 2 LAYERS REDUCED CLEARANCE - 14" STAINLESS STEEL OUTER SHELL - USED WITH TRANSITION PLATE.
P6 ASSEMBLED W/P5	DW1910TPDBEX	750					7.50	1375.10	1	DUCT TO CURB TRANSITION 3/4" DOWN TURN, 19-1/2" CURB TO 10" DUCT, 16 GA ALUMINIZED STEEL. FOR USE WITH EXHAUST FANS.
SYSTEM AT P6						-0.572	0.00			
	3M-2000PLUS						0.80		1	DUCT - 3M FIRE BARRIER 2000 PLUS SILICONE - USED AS SEALANT TO SEAL DUCT JOINTS.
	DW10DWCLASY-2R-S						5.67		1	DUCT - 10" DUCT - 14" DOUBLE "V" CLAMP - 2R INSULATION & SINGLE "V" CLAMP INCLUDED - REDUCED CLEARANCE.
TOTAL WEIGHT							167.04			

DOUBLE WALL FACTORY BUILT DUCTWORK

- ALL DUCTWORK IS REQUIRED TO BE INSTALLED WITH THE MAXIMUM SUPPORT SPACING LISTED BELOW.
- FOR A COMPLETE LIST OF APPROVED SUPPORT METHODS, SEE THE ENTIRE INSTALLATION AND OPERATION MANUAL
- DUCTWORK SHALL SLOPE NOT LESS THAN 1/16" PER LINEAR FOOT TOWARDS THE HOOD OR AN APPROVED GREASE COLLECTION RESERVOIR.
- WHERE HORIZONTAL DUCTS EXCEED 75 FEET IN LENGTH, THE SLOPE SHALL NOT BE LESS THAN 3/16" PER LINEAR FOOT.

HORIZONTAL	
DUCT DIAMETER	SUPPORT SPACING (FT)
5"	7'
6"	7'
7"	7'
8"	7'
10"	7'
12"	7'
14"	7'
16"	7'
18"	5'
20"	5'
22"	5'
24"	5'
26"	5'
28"	5'
30"	5'
32"	5'
34"	5'
36"	5'

VERTICAL			
TYPE	WALL SUPPORT (FT)	CURB SUPPORT (FT)	FLOOR SUPPORT (FT)
2R & 2R HT (5'-16')	20'	24'	24'
2R (18")	18'	24'	24'
3R & 3Z (5'-24')	10'	24'	24'
3Z (26' -36')	10'	20'	20'

DO NOT LEAK TEST USING SMOKE BOMBS CONTAINING CHLORINES/CHLORIDES. CONSULT WITH CAPTIVEAIRE FOR PROPER LEAK TESTING METHODS.

DUCTWORK #1 FRONT VIEW

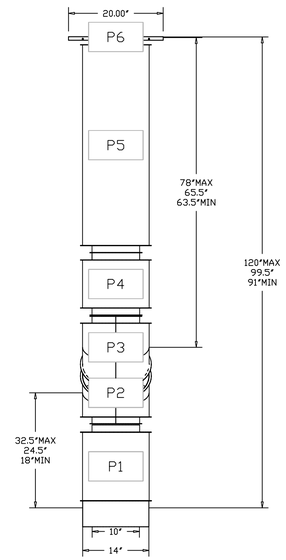

DUCTWORK #1 SIDE VIEW

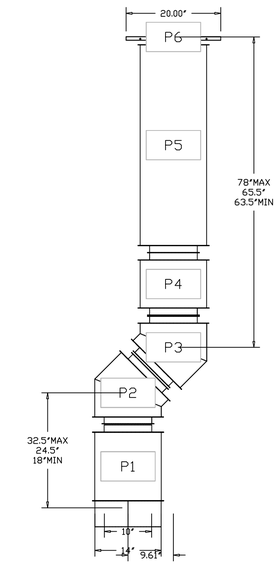

DUCTWORK #1 TOP VIEW

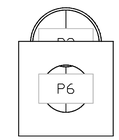

DUCTWORK #1 SE VIEW

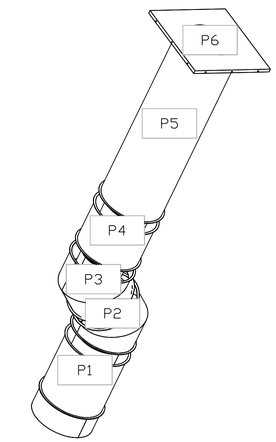

REVISIONS

DESCRIPTION	DATE:

CAPTIVEAIRE
www.captiveaire.com
Western OH Mechanical
, Cincinnati, OH, 45258 PHONE: (513) 275-4986 FAX: 9195168748 EMAIL: rsg133@captiveaire.com

Middletown Fire Station No 83 WRH R1 BID
FRANKLIN, OH, 45005

DATE: 6/29/2023

DWG.#: 6084821

DRAWN BY: grant.homan

SCALE: 3/4" = 1'-0"

MASTER DRAWING

SHEET NO. 8

SYSTEM DESIGN VERIFICATION (SDV)

IF ORDERED, CAS SERVICE WILL PERFORM A SYSTEM DESIGN VERIFICATION (SDV) ONCE ALL EQUIPMENT HAS HAD A COMPLETE START UP PER THE OPERATION AND INSTALLATION MANUAL. TYPICALLY, THE SDV WILL BE PERFORMED AFTER ALL INSPECTIONS ARE COMPLETE.

ANY FIELD RELATED DISCREPANCIES THAT ARE DISCOVERED DURING THE SDV WILL BE BROUGHT TO THE
ATTENTION OF THE GENERAL CONTRACTOR AND CORRESPONDING TRADES ON SITE. THESE ISSUES WILL BE DOCUMENTED AND FORWARDED TO THE APPROPRIATE SALES OFFICE. IF CAS SERVICE HAS TO
RESOLVE A DISCREPANCY THAT IS A FIELD ISSUE, THE GENERAL CONTRACTOR WILL BE NOTIFIED AND BILLED FOR THE WORK. SHOULD A RETURN TRIP BE REQUIRED DUE TO ANY FIELD RELATED DISCREPANCY THAT CANNOT BE RESOLVED DURING THE SDV, THERE WILL BE ADDITIONAL TRIP CHARGES.

DURING THE SDV, CAS SERVICE WILL ADDRESS ANY DISCREPANCY THAT IS THE FAULT OF THE MANUFACTURER. SHOULD A RETURN TRIP BE REQUIRED, THE GENERAL CONTRACTOR AND APPROPRIATE SALES OFFICE WILL BE NOTIFIED. THERE WILL BE NO ADDITIONAL CHARGES FOR MANUFACTURER DISCREPANCIES.

REVISIONS

DESCRIPTION	DATE:

CAPTIVEAIRE
www.captiveaire.com
Western OH Mechanical
, Cincinnati, OH, 45258 PHONE: (513) 275-4986 FAX: 9195168748 EMAIL: reg133@captiveaire.com

Middletown Fire Station No 83 WRH R1 BID
FRANKLIN, OH, 45005

DATE: 6/29/2023

DWG.#: 6084821

DRAWN BY: grant.homan

SCALE: 3/4" = 1'-0"

MASTER DRAWING

SHEET NO.
9