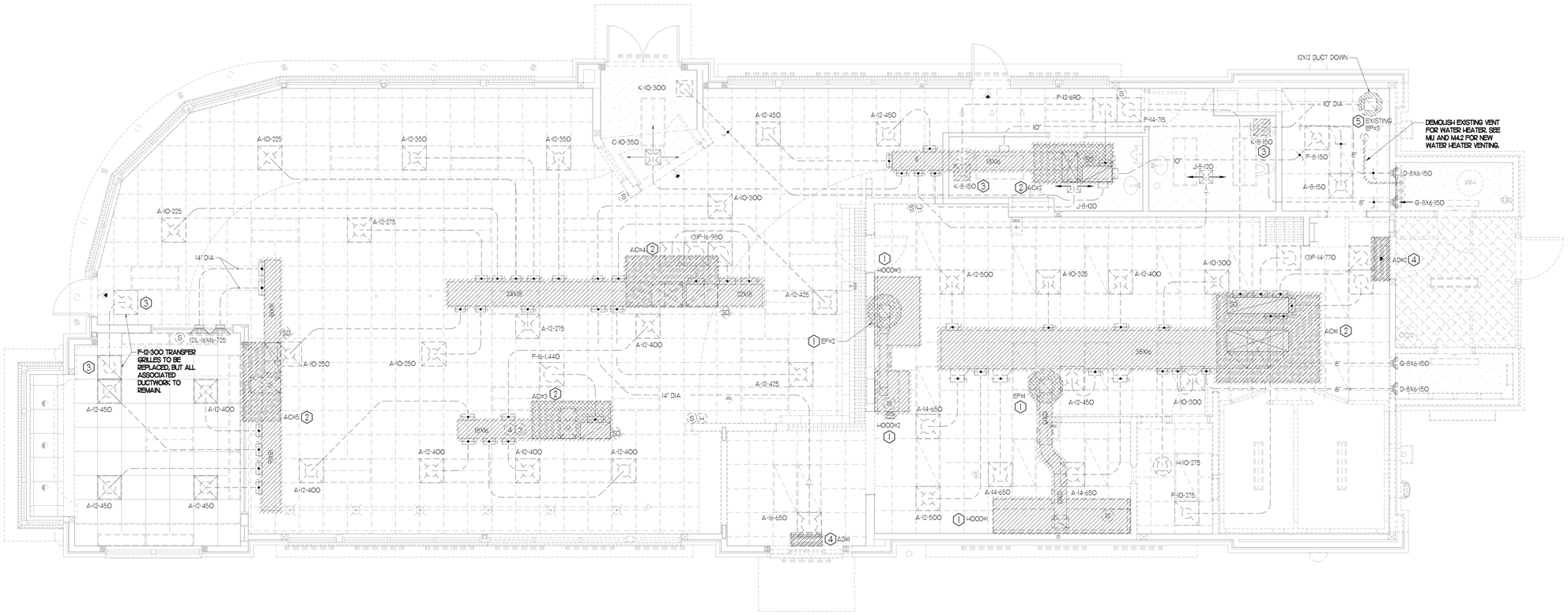

I MECHANICAL DEMOLITION PLAN

1/4"= 1'-0"

DEMOLITION NOTES

1. CONTRACTOR IS RESPONSIBLE FOR OBTAINING ALL NECESSARY PERMITS AND PAYING ALL APPLICABLE FEES.
2. DISPOSAL OF EQUIPMENT AND MATERIALS REQUIRED TO BE REMOVED SHALL BE THE RESPONSIBILITY OF THE CONTRACTOR PERFORMING THE WORK.
3. DE-ENERGIZE ALL ELECTRICAL CIRCUITS RELATED TO EQUIPMENT THAT WILL BE MOVED OR REMOVE PRIOR TO STARTING WORK. DE-ENERGIZE CIRCUITS SHALL BE PROTECTED WITH LOCKING DEVICES USING APPROPRIATE WARNING LABELS.
4. MECHANICAL CONTRACTOR SHALL BE RESPONSIBLE FOR PATCHING ROOF AFTER REMOVAL OF EXISTING MECHANICAL EQUIPMENT. SEE ARCHITECTURAL DRAWINGS FOR ROOF PATCHING REQUIREMENTS.
5. EXCEPT WHERE NOTED, EXISTING REMOTE TEMPERATURE AND/OR HUMIDITY SENSORS TO REMAIN. IF DURING RENOVATION PURPOSES CONTROLS SHALL BE TAKEN DOWN. MECHANICAL CONTRACTOR SHALL BE RESPONSIBLE FOR REINSTALLING AND TO PROVIDE ANY ADDITIONAL WIRING NEEDED.
6. MECHANICAL CONTRACTOR SHALL PERFORM ROUTINE MAINTENANCE ON EXISTING ROOFTOP UNITS AND MAKE ANY NECESSARY REFRIGERANT WITH NO LEAKS, NEW BELTS AND REPLACE AND FAN MOTORS NECESSARY.
7. DISCONNECT GAS PIPING FROM EXISTING ROOFTOP UNIT(S) TO BE REPLACED. PLUMBING CONTRACTOR WILL REMOVE EXISTING GAS PIPING TO BE DEMOLISHED.
8. CONTRACTOR SHALL INDICATE SALVAGE VALUE IN BID FOR ROOFTOP UNITS BEING REPLACED.

DEMOLITION KEY NOTES

1. DEMOLISH EXISTING KITCHEN HOOD, ALL ASSOCIATED GREASE DUCT, AND EXHAUST FAN ON ROOF. EXISTING EXHAUST FAN TO BE REPLACED. TURN OVER EXISTING EXHAUST FAN TO OWNER. COVER ROOF OPENING WEATHER-TIGHT FOR RE-USE. REFER TO SHEET M1.1 & M3.1 FOR FURTHER INFORMATION.
2. DEMOLISH EXISTING A/C UNIT AND, SUPPLY/RETURN AIR DROPS, ALL ASSOCIATED SUPPLY/RETURN DUCT (UNLESS OTHERWISE NOTED), AIR DEVICES AND TEMPERATURE SENSOR. CAP, SEAL AND COVER EXISTING ROOF CURB WEATHER-TIGHT. DISCONNECT GAS , ELECTRICAL, AND UNIT CONTROLS FROM EXISTING ROOFTOP UNIT. EXISTING ROOFTOP UNIT TO BE REPLACED WITH NEW AS SCHEDULED ON SHEET M3.1. SEE SHEETS M1.1 AND M3.1 FOR FURTHER INFORMATION.
3. DETACH AND REPLACE EXISTING AIR DEVICE SEE SHEET M1.1 FOR NEW AIR DEVICE LOCATIONS.
4. EXISTING AIR CURTAIN TO BE REPLACED WITH NEW AD. REFER TO M1.1 AND M3.1.
5. EXISTING EXHAUST FAN TO REMAIN.

DEMOLITION LEGEND

EXISTING EQUIPMENT, DUCT, AIR DEVICES ETC. TO REMAIN INTACT.

EXISTING EQUIPMENT, DUCT, AIR DEVICES ETC. TO BE DEMOLISHED.

LEGEND

A-12-400	TYPE - NECK SIZE - CFM	EF#1	EXHAUST FAN #1 (TYP.)
	SPIN-IN FITTING WITH MANUAL BALANCING DAMPER, WITHOUT SCOOP	AC#1	AIR CONDITIONING UNIT #1 (TYP.)
	SPIN-IN HARD O FLEXIBLE O DIFFUSER		RETURN/EXHAUST (TYP.)
	EXISTING EQUIPMENT, DUCT, & AIR DEVICE		SUPPLY DIFFUSER, SQ FACE (TYP.)
	NEW EQUIPMENT, DUCT, & AIR DEVICE		PLAN NOTE REFERENCE
	REMOTE TEMPERATURE SENSOR		MANUAL VOLUME DAMPER
	HUMIDITY SENSOR		DIRECTION OF THROW ON DIFFUSER
	STROBE AUDIO/VISUAL ALARM-ANNUNCIATOR		
12X18	DUCT SIZE (REVERSE FOR ELEVATION VIEWS) 1ST NUMBER - HORIZONTAL DIMENSION 2ND NUMBER - VERTICAL DIMENSION	CO2	CO2 SENSOR
			PULL STATION
	POINT OF DISCONNECTION.		CONTROL PANEL
	POINT OF CONNECTION.		SMOKE DETECTOR
	INDICATES 2-WAY DIFFUSER. INDICATES BLANKED OFF SIDE		

FIELD VERIFY ALL CONDITIONS

NOTE! AS NOTED IN THE SPECIFICATIONS, ALL WIRING LAYOUTS, PIPING LAYOUTS AND DUCT LAYOUTS ARE SCHEMATIC. EXACT LOCATIONS SHALL BE DETERMINED BY THE CONSTRUCTION AND STRUCTURE OF THE BUILDING AND SHALL BE VERIFIED AND COORDINATED IN THE FIELD. EACH TRADE CONTRACTOR SHALL VERIFY WITH THE GENERAL CONTRACTOR THAT HE HAS THOROUGHLY REVIEWED AND COORDINATED ALL LOCATIONS AND ROUTINGS WITH ALL OTHER TRADES PRIOR TO FABRICATION OF CONDUITS, DUCTS, OR PIPING, AND START OF INSTALLATION OF SAME (INCLUDING SPRINKLER PIPING WHEN PRESENT ON JOB). ANY INSTALLATION OR CONSTRUCTION CONFLICTS WHICH OCCUR IN THE FIELD SHALL BE RESOLVED BY THE TRADE CONTRACTOR TO THE SATISFACTION OF THE OWNER AND ARCHITECT AND AT NO EXPENSE TO THE OWNER, ARCHITECT AND/OR GENERAL CONTRACTOR.

THE CONTRACTOR SHALL CONTACT THE ARCHITECT, ENGINEER OR OWNER PRIOR TO BIDDING FOR INTERPRETATIONS AND CLARIFICATIONS OF THE DESIGN AND INCLUDE IN HIS BID ALL COSTS TO MEET THE DESIGN INTENT. CLARIFICATIONS MADE BY THE ARCHITECT, ENGINEER OR OWNER AFTER BIDDING WILL BE FINAL AND SHALL BE IMPLEMENTED AT CONTRACTORS COST.

BIDDING CONTRACTORS SHALL HAVE A WORKING KNOWLEDGE OF LOCAL CODES AND ORDINANCES AND SHALL INCLUDE IN THEIR BIDS THE COSTS FOR ALL WORK INSTALLED IN STRICT ACCORDANCE WITH GOVERNING CODES, THE PLANS AND SPECIFICATIONS NOT WITHSTANDING. THE CONTRACTOR SHALL ALERT ARCHITECT, ENGINEER OR OWNER OF ANY APPARENT DISCREPANCIES BETWEEN GOVERNING CODES AND DESIGN INTENT.

Chick-fil-A
5200 Buffington Road
Atlanta, Georgia
30349-2998

INTERPLAN
INTERPLAN LLC
AR99238
CA 8660
ARCHITECTURE
ENGINEERING
PERMITTING
220 E. CENTRAL PKWY. STE 4000
ALTAMONTE SPRINGS, FL 32701
407.645.5008

SEAL:

STACY TREVOR HENSON
REGISTERED ENGINEER
No. 24
AGRICULTURE
COMMERCE
STATE OF TENNESSEE

Stacy T Henson
2024.03.08
17:08:53-05'00'

CHICK-FIL-A
MILLINGTON
8492 US Highway 51 N
Millington
TN 38053

FSU#02699

BUILDING TYPE / SIZE: S08-N-144-R
RELEASE: 23.04
PRINTED FOR
CONSTRUCTION

REVISION SCHEDULE

NO.	DATE	DESCRIPTION

CONSULTANT PROJECT #	2022.0772
DATE	July 2023
DRAWN BY	AE
CHECKED BY	DAK

Information contained on this drawing and in all digital files produced for above named project may not be reproduced in any manner without express written or verbal consent from authorized project representatives.

SHEET
MECHANICAL DEMO PLAN

SHEET NUMBER
M1.0

COPYRIGHT © 2023 INTERPLAN LLC. RESERVES COPYRIGHT & OTHER RIGHTS RESTRICTING THESE DOCUMENTS TO THE ORIGINAL SITE OR PURPOSE FOR WHICH THEY WERE PREPARED. REPRODUCTIONS, CHANGES OR ASSIGNMENTS ARE PROHIBITED.

I MECHANICAL FLOOR PLAN

1/4"= 1'-0"

HVAC KEY NOTES

1. PROVIDE NEW ELECTRIC COOLING/ GAS HEATING ROOFTOP UNIT WITH PRE-FABRICATED, MINIMUM 14" INCH INSULATED ROOF CURB. MAINTAIN MINIMUM HEIGHT OF 8 INCHES, FROM ROOF SURFACE. REFER TO HVAC SCHEDULE ON SHEET M3.1. FIELD VERIFY AND COORDINATE WITH STRUCTURAL AND ALL LOCAL AND STATE REQUIREMENTS PRIOR TO BID AND CONSTRUCTION.
2. CONTRACTOR TO INSTALL OVERFLOW SWITCH INSIDE ROOFTOP UNIT DRAIN PAN, ON DOWN-FLOW UNITS AND ALL OTHER COILS THAT DO NOT HAVE A SECONDARY DRAIN AND DO NOT HAVE A MEANS TO INSTALL AN AUXILIARY DRAIN PAN, A WATER-LEVEL MONITORING DEVICE SHALL BE INSTALLED INSIDE THE PRIMARY DRAIN PAN. THIS DEVICE SHALL SHUT OFF THE EQUIPMENT SERVED IN THE EVENT THAT THE PRIMARY DRAIN BECOMES RESTRICTED. EXTERNALLY INSTALLED DEVICES AND DEVICES INSTALLED IN THE DRAIN LINE SHALL NOT BE PERMITTED.
3. PROVIDE RUSKIN CD35 MANUAL BALANCING DAMPER WITH 6" MAXIMUM BLADE WIDTH, OPPOSED BLADE ACTION, LOCKING QUADRANT HANDLE WITH 2" STANDOFF AND 16 GA GALVANIZED BLADE AND FRAME CONSTRUCTION.
4. PROVIDE A LENNOX FACTORY INSTALLED RETURN SIDE SMOKE DETECTOR. REFER TO SCHEDULE ON SHEET M3.1 AND LENNOX SMOKE DETECTOR AND ANNUNCIATOR WIRING DIAGRAM ON SHEET M4.3. SEE ADDED BOXED NOTE S-HEET M3.1 HVAC SCHEDULE REGARDING SUPPLY SIDE SMOKE DETECTOR IF REQUIRED BY LOCAL JURISDICTION.
5. TRANSITION IN VERTICAL DROP FROM FULL SIZE OF CURB OPENING TO SIZE SHOWN. SEE DETAIL 5/M4.2 FOR REQUIRED TRANSITION GEOMETRY. TRANSITION WITHIN CURB WHERE REQUIRED TO AVOID STRUCTURE. WHERE THE DUCT IS SHOWN OFFSET HORIZONTALLY, PROVIDE ELBOW WITHOUT TURNING VANES. FOR DROPS WITH NO HORIZONTAL OFFSET, EXTEND DROP BELOW STRUCTURE TO ACCOMMODATE START COLLARS. TERMINATE DROP A MINIMUM 0'-10" ABOVE CEILING (0'-4" ABOVE CEILING IF REQUIRED TO ACCOMMODATE TAKE-OFF AND DROP IS NOT LOCATED DIRECTLY ABOVE A LIGHT).
6. TRANSITION IN VERTICAL DROP FROM FULL SIZE OF CURB OPENING TO SIZE SHOWN. TRANSITION WITHIN CURB WHERE REQUIRED TO AVOID STRUCTURE. WHERE THE DUCT IS SHOWN OFFSET HORIZONTALLY, PROVIDE ELBOW WITH TURNING VANES. FOR DROPS WITH NO HORIZONTAL OFFSET, EXTEND DROP BELOW STRUCTURE TO ACCOMMODATE START COLLARS. TERMINATE DROP A MINIMUM 0'-10" ABOVE CEILING (0'-4" ABOVE CEILING IF REQUIRED TO ACCOMMODATE TAKE-OFF AND DROP IS NOT LOCATED DIRECTLY ABOVE A LIGHT).
7. PROVIDE NEW FAN WITH NEW CURB AT LOCATION SHOWN ON PLAN. LOCATE A MINIMUM OF 10 FT FROM PARAPET WALLS IF PARAPET IS LOWER THAN 42" OR FROM ANY NEW OR EXISTING OUTSIDE AIR INTAKE. COORDINATE EXACT LOCATION IN FIELD WITH EXISTING EQUIPMENT AND PIPING. SEE DETAIL ON M4.1 FOR ORIENTATION OF HINGE SIDE OF FAN ON CURB.
8. FIELD VERIFY EXHAUST AIR MAINTAINS A 10 FOOT MINIMUM CLEARANCE FROM ANY FRESH AIR INTAKE AND COMPLIES WITH ALL CODE REQUIREMENTS.
9. SEE ELEVATION ON M2.1 FOR CJ FAN DUCTING REQUIREMENTS.
10. NEW MANUAL PULL STATION SHALL BE LOCATED 10 FEET MINIMUM TO 20 FEET MAXIMUM FROM HOOD, ONE AT OR NEAR EVERY POINT OF EGRESS FROM THE HOOD COOKING AREA. PULL STATION SHALL BE SECURELY MOUNTED NOT LESS THAN 42" (INCHES) OR MORE THAN 48" (INCHES) FROM THE FLOOR. PROVIDE SIGNAGE FOR PULL STATION.
11. PROVIDE NEW AIR DEVICE, MAXIMUM LENGTH OF FLEXIBLE DUCT RUN-OUT IS 4 FEET, NO EXCEPTIONS. FIELD VERIFY & COORDINATE LOCATIONS PRIOR TO BID & CONSTRUCTION. RE-BALANCE AIR QUANTITY AS SHOWN ON PLAN. PROVIDE WITH MANUAL VOLUME DAMPER WITH ACCESSIBILITY. ANY DEFICIENCIES AND OR DISCREPANCIES SHALL BE REPORTED TO ARCHITECT/ENGINEER IMMEDIATELY.
12. MECHANICAL CONTRACTOR TO ADJUST PATTERN DEFLECTORS TO THROW STRAIGHT DOWN.
13. PROVIDE NEW TRANSFER AIR GRILLES WITHOUT BALANCING DAMPERS. SEE 5/M4.2.
14. MOUNT NEW REMOTE TEMPERATURE SENSOR ON WALL AT 5'-0" AFF AND ROUTE WIRING BACK TO SUNCOAST TEMP CONTROL PANEL. FOR SENSOR SERVING KITCHEN ACH, 5'-8" AFF. COORDINATE EXACT LOCATION WITH KITCHEN EQUIPMENT PRIOR TO BID AND CONSTRUCTION.
15. MOUNT NEW LENNOX HUMIDITY SENSOR ON WALL ABOVE SPACE TEMP SENSOR AND ROUTE WIRING TO UNIT ON ROOF.
16. STRONG SYSTEMS SHALL SUPPLY AND INSTALL CO2 SENSOR ANALOX- AX60. SENSOR SHALL BE MOUNTED AT 12" AFF WITH SPLASH GUARD AND CAGE. ELECTRICAL CONTRACTOR TO PROVIDE SINGLE-GANG J-BOX WITH 1/2" CONDUIT EXTENDED TO ABOVE ACCESSIBLE CEILING SPACE. INSTALL PER MANUFACTURERS RECOMMENDATIONS AND PER LOCAL CODE REQUIREMENTS. FIELD VERIFY EXACT LOCATION AND ALL REQUIREMENTS PRIOR TO BID AND CONSTRUCTION. FOR MORE INFORMATION CONTACT : STRONG SYSTEMS INTERNATIONAL, INC. CHRIS VERCH (770) 729-1199 OR (770) 462-2501.
17. STRONG SYSTEMS SHALL SUPPLY AND INSTALL CO2 ANNUNCIATOR MOUNTED AT 60" AFF. ELECTRICAL CONTRACTOR TO PROVIDE SINGLE-GANG J-BOX WITH 1/2" CONDUIT EXTENDED TO ABOVE ACCESSIBLE CEILING SPACE. INSTALL PER MANUFACTURERS RECOMMENDATIONS AND PER LOCAL CODE. FIELD VERIFY EXACT LOCATION AND ALL REQUIREMENTS PRIOR TO BID AND CONSTRUCTION. FOR MORE INFORMATION CONTACT : STRONG SYSTEMS INTERNATIONAL, INC. CHRIS VERCH (770) 729-1199 OR (770) 462-2501.
18. STRONG SYSTEMS SHALL SUPPLY AND INSTALL CO2 CENTRAL CONTROL UNIT MOUNTED AT AT 60" AFF. ELECTRICAL CONTRACTOR TO PROVIDE SINGLE-GANG J-BOX WITH 1/2" CONDUIT EXTENDED TO ABOVE ACCESSIBLE CEILING SPACE. INSTALL PER MANUFACTURERS RECOMMENDATIONS AND PER LOCAL CODE. FIELD VERIFY EXACT LOCATION AND ALL REQUIREMENTS PRIOR TO BID AND CONSTRUCTION. COORDINATE WITH ELECTRICAL DRAWING E2.2 FOR EXACT LOCATION. FOR MORE INFORMATION CONTACT : STRONG SYSTEMS INTERNATIONAL, INC. CHRIS VERCH (770) 729-1199 OR (770) 462-2501.
19. AIR CURTAIN, MOUNTED IN CEILING AS SHOWN. MECHANICAL CONTRACTOR SHALL ADJUST AIR DEFLECTORS TOWARD BOTTOM OF DOOR OPENING, SEE DETAIL 1/M4.2.
20. LOCATE SENSOR AT 5'-0" AFF. COORDINATE EXACT LOCATION WITH OTHER TRADES. ROUTE WIRING BACK TO AD AT CEILING, SEE WIRING DIAGRAM IN DETAIL 2/M4.2.
21. AIR CURTAIN MOUNTED OVER DOOR HEADER AT 7'-2" AFF TO BOTTOM OF UNIT. PROVIDE BLOCKING IN WALL BEHIND AIR CURTAIN. USE FACTORY PRE-PUNCHED MOUNTING HOLES ON BACK SIDE OF AIR CURTAIN ONLY. ATTACH AIR CURTAIN TO WALL USING 3/8" LAG BOLTS, LENGTH AS REQUIRED TO FULLY PENETRATE BLOCKING. LOCATE MAGNETIC CONTACT TYPE MICROSWITCH IN DOOR FRAME ON STRIKE SIDE.
22. MECHANICAL CONTRACTOR TO ROUTE CONCENTRIC VENTS FROM WATER HEATER TO ROOF AT LOCATION SHOWN. FIELD VERIFY EXHAUST AIR MAINTAINS A 10 FOOT MINIMUM CLEARANCE FROM ANY FRESH AIR INTAKE AND COMPLIES WITH ALL CODE REQUIREMENTS. SEE DETAIL 3 AND 4 IN M4.2 FOR MORE INFORMATION.
23. TAKE OFF WITH DAMPER AT THE BOTTOM OF DUCTWORK, TYP.
24. MECHANICAL CONTRACTOR TO ADJUST PATTERN DEFLECTORS AS SHOWN ON PLANS.
25. MOUNT BOTTOM OF SIDE WALL DIFFUSER'S FRAME AT 10' 6" IN PLAYGROUND.

HVAC GENERAL NOTES

1. DUCT SIZES SERVING DIFFUSERS AND GRILLES ARE SAME SIZE AS DIFFUSER OR GRILLE NECK UNLESS NOTED OTHERWISE.
2. MECHANICAL CONTRACTOR SHALL BALANCE HVAC SYSTEM AS SHOWN ON THE PLAN & RTU SCHEDULE ON SHEET M-3.1. IF AIRFLOWS DIFFER BY MORE THAN 5%, CONTACT CFA CONSTRUCTION MANAGER.
3. NO PIPING OR DUCTWORK ALLOWED ABOVE ANY ELECTRICAL/CONTROL PANELS.
4. COORDINATE NEW WORK WITH EXISTING CONDUITS, STRUCTURE, & PIPING. FIELD VERIFY EXISTING CONDITIONS PRIOR TO COMMENCING WORK. CONTRACTOR TO NOTIFY DESIGN TEAM WITHOUT DELAY IF ACTUAL LOCATION OF EXISTING MECHANICAL EQUIPMENT DOES NOT MATCH FLOOR PLAN.
5. CONTRACTOR SHALL CLEAN & REFURBISH ALL EXISTING DUCTWORK. PATCH & REPAIR OPENING AIR TIGHT OF EXISTING DUCTWORK AS REQUIRED (TYPICAL ALL). FIELD VERIFY AND COORDINATE ALL EXISTING HVAC SIZES, LOCATIONS, AND CONDITION PRIOR TO BID.
6. REUSE AND REWORK EXISTING HVAC DUCTWORK. PROVIDE NEW SECTION FOR RECONNECTION AS REQUIRED. FIELD VERIFY ALL REQUIREMENTS PRIOR TO BID.
7. CONTRACTOR SHALL BALANCE, INSPECT, REPAIR, OR REPLACE AS NECESSARY IF REQUIRED FOR EXISTING CEILING MOUNTED AIR DEVICES TO REMAIN. FIELD VERIFY AND COORDINATE EXACT SIZE, AIR QUANTITY, LOCATION, AND CONDITION PRIOR TO BID. AIR FLOW SHALL REMAIN AS IS UNLESS NOTED ON PLAN, OR DIRECTED BY CONSTRUCTION MANAGER. ANY DEFICIENCIES AND OR DISCREPANCIES SHALL BE REPORTED TO ARCHITECT/ENGINEER IMMEDIATELY. COORDINATE AIR BALANCE RESULTS WITH CONSTRUCTION MANAGER.

NOTE:

ALL NEW HOODS SHALL BE RATED WITH ONE INCH THICK LAYER OF FACTORY INSTALLED INSULATION TO MEET "ZERO INCH" CLEARANCE TO COMBUSTIBLE MATERIALS. HOOD SHALL BE CERTIFIED BY ETL SPECIFICATIONS, AND SHALL CONFORM TO UL STANDARD 710, BUILT PER NFPA 96 SECTION 4.2.2., AND NSF LISTED.

NOTE: IF BALANCING DAMPERS ARE NOT EXISTING IN THE BRANCH DUCT OR AT THE TAKE-OFF, MECHANICAL CONTRACTOR SHALL SUPPLY AND INSTALL NEW BALANCING DAMPERS WITHIN THE BRANCH DUCT (TYPICAL).

Chick-fil-A
5200 Buffington Road
Atlanta, Georgia
30349-2998

INTERPLAN
INTERPLAN LLC
AR99238
CA 8660

ARCHITECTURE
ENGINEERING
PERMITTING

220 E. CENTRAL PKWY, STE 4000
ALTAMONTE SPRINGS, FL 32701
407.645.5008

SEAL:

STACY TREVOR HENSON
REGISTERED ENGINEER
No. 19
AGRICULTURE
COMMERCE
STATE OF TENNESSEE

Stacy T Henson
2024.03.08
17:08:54-05'00'

CHICK-FIL-A
MILLINGTON
8492 US Highway 51 N
Millington
TN 38053

FSU#02699

BUILDING TYPE / SIZE: S08-N-144-R
RELEASE: 23.04
PRINTED FOR
CONSTRUCTION

REVISION SCHEDULE

NO.	DATE	DESCRIPTION

CONSULTANT PROJECT # 2022.0772
DATE July 2023
DRAWN BY AE
CHECKED BY DAK

Information contained on this drawing and in all digital files produced for above named project may not be reproduced in any manner without express written or verbal consent from authorized project representatives.

COPYRIGHT © 2023 INTERPLAN LLC. RESERVES COPYRIGHT & OTHER RIGHTS RESTRICTING THESE DOCUMENTS TO THE ORIGINAL SITE OR PURPOSE FOR WHICH THEY WERE PREPARED. REPRODUCTIONS, CHANGES OR ASSIGNMENTS ARE PROHIBITED.

SHEET
MECHANICAL FLOOR PLAN

SHEET NUMBER
M1.1

KITCHEN HOOD SYSTEMS NOTES

1. CHICK-FIL-A MAINTAINS A NATIONAL ACCOUNT WITH HALTON CO. FOR THE HOODS. CHICK-FIL-A WILL PURCHASE AND PROVIDE THE HOODS FOR INSTALLATION BY THE MECHANICAL CONTRACTOR. THE MECHANICAL CONTRACTOR SHALL BE RESPONSIBLE FOR RECEIVING THE HOODS. CONTACT HALTON CO. AT 270-237-5600 FOR MORE INFO.
2. THE FIRE SUPPRESSION SYSTEM SHALL CONSIST OF A COMPLETE WET ANSUL SYSTEM FURNISHED BY HALTON. THE HOOD SHALL BE FURNISHED PRE-PIPED BY HALTON.
3. THE R-102 ANSUL FIRE SUPPRESSION SYSTEM EXTERNAL TO THE HOODS SHALL BE INSTALLED IN ACCORDANCE WITH HOOD MANUFACTURER'S SHOP DRAWINGS BY AN AUTHORIZED ANSUL SYSTEM INSTALLER HIRED BY HALTON.
4. HOOD EXHAUST DUCTWORK SHALL BE 16 GA. BLACK STEEL WITH CONTINUOUS LIQUID TIGHT WELD OF JOINTS & SEAMS.
5. TURNS IN GREASE EXHAUST DUCTWORK SHALL BE LONG RADIUS TYPE, WITH A CENTERLINE RADIUS R=3W/2, NO EXCEPTIONS ALLOWED. NO MITERED FITTINGS ALLOWED.
6. ALL STAINLESS STEEL CLOSURE PANELS SHALL BE SUPPLIED BY HOOD MANUFACTURER AND INSTALLED BY THE MECHANICAL CONTRACTOR ACCORDING TO MANUFACTURER'S RECOMMENDATIONS.
7. SLOPE ALL GREASE EXHAUST DUCT BACK TO HOOD AT 1/4" PER FOOT OF RUN.
8. WRAP NEW GREASE DUCT WITH UNIFRAX FYREWRAP. INSULATION ON ACCESS DOORS SHALL BE INSTALLED ACCORDING TO MANUFACTURER'S INSTALLATION RECOMMENDATIONS. UNIFRAX FYREWRAP PRODUCT USED SHALL MEET LOCAL CODE REQUIREMENTS.
9. SUPPORT HOOD#1L&#1R- HOOD#3 WITH THREADED ROD AT EACH FACTORY SUPPORT POINT. EACH SUPPORT POINT MUST SUPPORT THE HOOD WEIGHT EQUALLY. ATTACH TO STRUCTURE AS DETAILED ON STRUCTURAL DRAWINGS.

GREASE EXHAUST DUCT CLEARANCE NOTE:

CLEARANCES ABOVE CEILING ARE TIGHT. MECHANICAL CONTRACTOR TO FIELD VERIFY EXACT ROUTING AND CLEARANCES PRIOR TO FABRICATING GREASE EXHAUST DUCT.

CAPTURE JET NOTE:

REFER TO "CAPTURE-JET FAN INSTALLATION AND DEIMENSIONAL DATA" SCHEDULE ON HALTON SHOP DRAWINGS (SHEET MH.1) FOR INFORMATION ON CAPTURE JET FAN.

NOTE:

ALL NEW HOODS SHALL BE RATED WITH ONE INCH THICK LAYER OF FACTORY INSTALLED INSULATION TO MEET "ZERO INCH CLEARANCE" TO COMBUSTIBLE MATERIALS. HOOD SHALL BE CERTIFIED BY ETL SPECIFICATIONS, AND SHALL CONFORM TO UL STANDARD 710, BUILT PER NFPA 96 SECTION 4.2.2., AND NSF LISTED.

CLEANOUT DOOR NOTE:

DUCT WRAP SHALL BE APPLIED TO THE CLEANOUT DOOR PER THE WRAP MFR'S INSTALLATION INSTRUCTIONS, NO EXCEPTIONS. ALSO, THE CLEANOUT DOOR MUST BE REMOVABLE WITHOUT TOOLS AND MUST BE CLEARLY AND PERMANENTLY LABELED.

HOOD ELEVATION NOTE:

HOOD ELEVATIONS ON THIS SHEET ONLY SERVE ILLUSTRATIVE PURPOSES. SEE DETAILS ON HALTON SHOP DRAWINGS ON SHEET MH.1 FOR DETAILS ON STANDOFFS, CLEARANCES, AND HOOD CONSTRUCTION.

HOOD SCHEDULE

MARK	EXHAUST CFM	SP • TAB PORT	CAPTURE JET CFM & SP.	TYPE	COLLAR SIZE	WIDTH	DEPTH	HEIGHT	MANUFACTURER	MODEL	REMARKS
NEW HOOD#1R	1204	0.22	80 • 0.30"	CANOPY	14"X8"	107	37	38	HALTON	KVL-2	1
NEW HOOD#1L	709	0.23	47 • 0.30"	CANOPY	8"X8"	63	37	38	HALTON	KVL-2	1
NEW HOOD#2	701	0.39	30 • 0.29"	CANOPY	8"X8"	42	34	38	HALTON	KVL-C	1
NEW HOOD#3	701	0.39	30 • 0.29"	CANOPY	8"X8"	42	34	38	HALTON	KVL-C	1
NOTES	DIMENSIONS OF HOODS INCLUDE BACK AND SIDE SPACERS (HEIGHT DOES NOT INCLUDE CLOSURE PANELS).										
REMARKS	1. TYPICAL INSTALLATION FOR NEW HOODS. FIELD VERIFY & COORDINATE WITH HOOD DRAWINGS BY HALTON. REFER TO SHEET MH.1.1 & MH.1.2 PRIOR TO BID & CONSTRUCTION.										

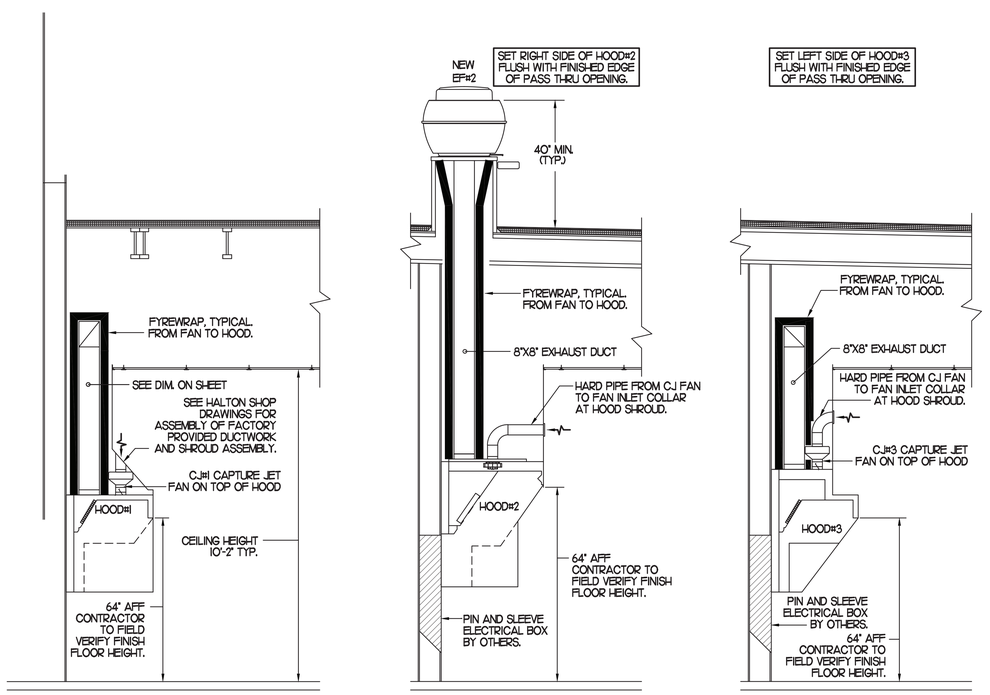

3 HOOD ELEVATIONS

SCALE: NONE

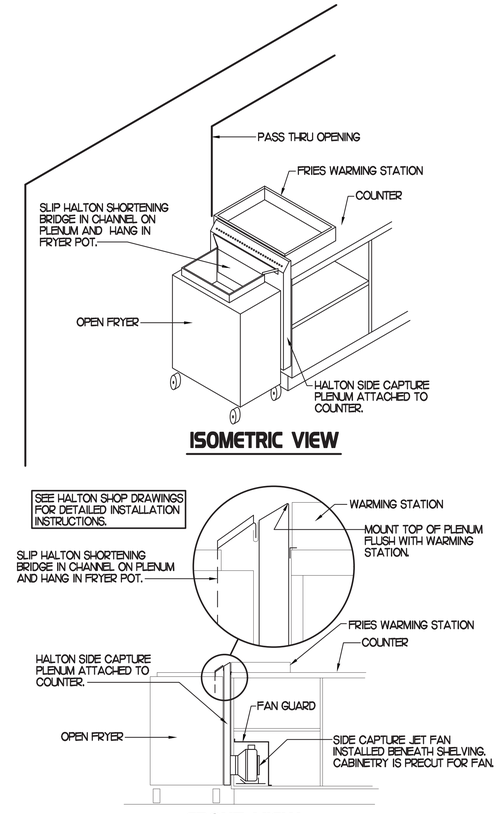

2 HALTON SIDE CAPTURE JET PLENUM

SCALE: NONE

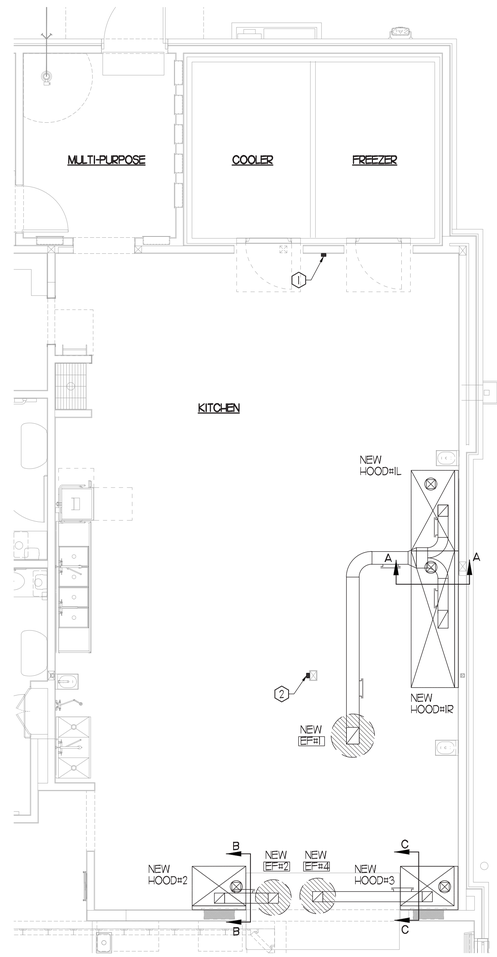

HOOD LAYOUT NOTES

1. ANSUL PULL STATION SERVING NEW HOOD #1, LOCATE ANSUL PULL STATION BETWEEN 42" AND 48" AFF. COORDINATE EXACT LOCATION WITH KITCHEN EQUIPMENT ELEVATIONS. J-BOX AND CONDUIT ARE BY ELECTRICAL. PROVIDE RED BAKELITE LABEL WITH 1/2" HIGH LETTERS INDICATING THE HOODS SERVED.
2. ANSUL PULL STATION SERVING NEW HOODS #2 AND #3. LOCATE ANSUL PULL STATION BETWEEN 42" AND 48" AFF. COORDINATE EXACT LOCATION WITH KITCHEN EQUIPMENT ELEVATIONS. J-BOX AND CONDUIT ARE BY ELECTRICAL. PROVIDE RED BAKELITE LABEL WITH 1/2" HIGH LETTERS INDICATING THE HOODS SERVED.

1 HOOD LAYOUT

1/8"=1'-0"

Chick-fil-A
5200 Buffington Road
Atlanta, Georgia
30349-2998

INTERPLAN
INTERPLAN LLC
AR99238
CA 8660

ARCHITECTURE
ENGINEERING
PERMITTING

220 E. CENTRAL PKWY, STE 4000
ALTAMONTE SPRINGS, FL 32701
407.645.5008

SEAL:

Stacy T Henson
2024.03.08
17:08:55-05'00'

CHICK-FIL-A
MILLINGTON
8492 US Highway 51 N
Millington
TN 38053

FSU#02699

BUILDING TYPE / SIZE: S08-N-144-R
RELEASE: 23.04
PRINTED FOR
CONSTRUCTION

REVISION SCHEDULE

NO.	DATE	DESCRIPTION

CONSULTANT PROJECT #	2022.0772
DATE	July 2023
DRAWN BY	AE
CHECKED BY	DAK

Information contained on this drawing and in all digital files produced for above named project may not be reproduced in any manner without express written or verbal consent from authorized project representatives.

COPYRIGHT © 2023 INTERPLAN LLC. RESERVES COPYRIGHT & OTHER RIGHTS RESTRICTING THESE DOCUMENTS TO THE ORIGINAL SITE OR PURPOSE FOR WHICH THEY WERE PREPARED. REPRODUCTIONS, CHANGES OR ASSIGNMENTS ARE PROHIBITED.

SHEET
HOOD DETAILS & SCHEDULES

SHEET NUMBER
M2.1

GAS FIRED ROOFTOP UNIT SCHEDULE

MARK	TONNAGE	AREA SERVED	COOLING CAPACITY (MBH)		HEATING CAPACITY (MBH)			FAN SECTION (CFM)				EXISTING MANUFACTURER/ MODEL	NEW MANUFACTURER/ MODEL	AIR RATINGS	PRECENTAGE OF OUTDOOR AIR	ELECTRICAL DATA			REMARKS	APPROX. NET WEIGHT INCLUDING OPTIONS
			TOTAL	SENS	INPUT	OUTPUT	STAGES	SUPPLY	O.A.	HP	ESP					VOLT/PHASE	MCA	MOCP		
NEW AC#1	25.0	KITCHEN	294.5	226.8	480.0	384.0	2	9,000	1,600	10	1.0	LENNOX/LGC180H4	LENNOX/LGH-300S4B	10.5 EER2/10.9 IEER	17.8%	208/3/60	142	150	1,3,4,5,7,8,9,10,11,12,14,15,16,17	2,971 LBS
NEW AC#2	5.0	DINING-A/MECH-102	63.3	47.5	150.0	120.0	2	2,000	450	1	.65	LENNOX/LGA060H4	LENNOX/LGH060H4E	12.7 EER2/17.1 SEER	22.5%	208/3/60	33	45	2,3,4,6,7,8,9,10,11,12,14,15,16,17	859 LBS
NEW AC#3	10.0	DINING/DT/SERVING	124.4	89.6	240.0	192.0	2	4,000	800	3	.65	LENNOX/LGA090H4	LENNOX/LGH120H4B	12 EER2/13 IEER	20.0%	208/3/60	43	50	2,3,4,6,7,8,9,10,11,12,14,15,16,17	1,446 LBS
NEW AC#4	10.0	DINING/ENTRY/ORDER	124.4	89.6	240.0	192.0	2	4,000	1000	3	.65	LENNOX/LGA120H4	LENNOX/LGH120H4B	12 EER2/13 IEER	25.0%	208/3/60	43	50	2,3,4,6,7,8,9,10,11,12,14,15,16,17	1,446 LBS
NEW AC#5	5.0	PLAY AREA	63.3	47.6	150.0	120.0	2	2,000	300	1	.65	LENNOX/LGA060H4	LENNOX/LGH060H4E	12.7 EER2/17.1 SEER	15.0%	208/3/60	33	45	2,3,4,6,7,8,9,10,11,12,14,15,16,17	859 LBS

ALL NEW ROOFTOP UNITS SHALL INCLUDE A HUMIDITROL OPTION WITH FACTORY WALL MOUNTED HUMIDITY SENSOR.

REMARKS

1. PROVIDE DIFFERENTIAL ENTHALPY ECONOMIZER WITH POWER EXHAUST.
2. PROVIDE DIFFERENTIAL ENTHALPY ECONOMIZER WITH BAROMETRIC EXHAUST.
3. PROVIDE NEW 14" HIGH ROOF CURB.
4. SEE DETAIL 2/M-701. FOR SETTING OF CONTROL PARAMETERS BY MC.
5. FACTORY INSTALLED 115V GFI SERVICE OUTLET. SEPERATE 115V CIRCUIT PROVIDED BY ELECTRICAL CONTRACTOR.
6. FACTORY INSTALLED RETURN AIR SMOKE DETECTOR.
7. FACTORY INSTALLED NON-FUSED DISCONNECT.
8. 2" MERV 13 THROW AWAY FILTERS.
9. HINGED PANELS FOR ACCESS TO FILTERS), FAN BLOWER & MOTOR, COMPRESSOR(S) ACCESS AND CONTROLS.
10. FACTORY COIL HAIL GUARD, FIELD INSTALLED.
11. FRESH AIR TEMPERING KIT.
12. HOT GAS DEHUMIDIFICATION OPTION WITH WALL MOUNTED HUMIDITY SENSOR.
13. FACTORY INSTALLED BELT TENSIONER.
14. FACTORY CONFIGURED PHASE LOSS PROTECTION.
15. FACTORY INSTALLED CONDENSATE PAN DRAIN OVERFLOW SWITCH.
16. FACTORY STAINLESS STEEL HEAT EXCHANGER.
17. KOOL SCOR RATING.

- CONTRACTOR SHALL VERIFY EXACT ELECTRICAL CONNECTIONS, WIRE SIZES, BREAKERS, DISCONNECT, ETC. FOR THE NEW ROOFTOP UNITS PRIOR TO ORDERING AND BID.
- TEST AND BALANCE REPORT SHALL BE DONE PRIOR TO STORE TURNOVER AND SUBMITTED TO CFA'S CONSTRUCTION MANAGER AND TO ENGINEER OF RECORD.
- NEW HVAC EQUIPMENTS SHALL BE INSTALLED IN ACCORDANCE WITH THE MANUFACTURER'S INSTALLATION INSTRUCTIONS INCLUDING CLEARANCES, & SHALL MEET ALL LOCAL AND STATE CODE REQUIREMENTS. INSTRUCTIONS SHALL BE ON SITE AND AVAILABLE FOR ALL INSPECTIONS, SERVICE, REPAIR, OR REPLACEMENT.
- NEW ROOFTOP UNITS ONLY, MECHANICAL CONTRACTOR SHALL RELOCATE THE FACTORY INSTALLED SUPPLY SIDE SMOKE DETECTOR FROM THE BLOWER SECTION TO THE SUPPLY DUCT DROP ABOVE THE FIRST 90 DEGREE DUCT FITTING.
- NEW ROOFTOP UNITS ONLY, THE MECHANICAL CONTRACTOR SHALL SPLICE NEW PLENUM RATED CABLE BETWEEN THE FACTORY SMOKE DETECTOR AND THE FACTORY JACK PLUG. THE NEW WIRING SHALL BE ROUTED THRU THE ROOFTOP UNIT BASEPAN RACEWAY. SPLICES SHALL BE JOINED WITH CRIMP ON FITTINGS AND HEAT SHRINK JACKETS.

EXHAUST FAN SCHEDULE

MARK	CFM	ESP	RPM	TIP SPEED (FPM)	HP	AREA SERVED	MODEL	MANUFACTURER	REMARKS
NEW EF-1	1,913	.65	964	4,164	1/2	HOOD#1	K15V15B	LOREN COOK	1,2,3,4,5,6
NEW EF-2	701	.75	1,238	4,861	1/3	HOOD#2	150VI-HB	LOREN COOK	1,2,3,4,5,6
EXISTING EF-3	300	-	-	-	-	RESTROOMS	ACED-90C150-H	LOREN COOK	12
NEW EF-4	701	.75	1,238	4,861	1/3	HOOD#3	150VI-HB	LOREN COOK	1,2,3,4,5,6

NOTES

- GREASE EXHAUST FAN RPM BASED ON 80 DEGREE F AIR AT 1000 FEET ABOVE SEA LEVEL.
- GREASE EXHAUST FANS TO BE UL 762 LISTED.
- CHICK-FIL-A HAS A NATIONAL ACCOUNT WITH TOM BARROW COMPANY FOR THE FAN/CURB PACKAGE. THE MECHANICAL CONTRACTOR IS REQUIRED TO PURCHASE THE FAN/CURB PACKAGE DIRECTLY FROM TOM BARROW COMPANY. CONTACT MR. SCOTT GEORGE AT 404-351-1010 FOR PRICING AND AVAILABILITY. FANS AND CURBS NOT PURCHASED THRU TOM BARROW COMPANY WILL NOT BE ACCEPTED.

REMARKS

1. PROVIDE FACTORY 1'-0" BASE CURB AND EXTENSION.
2. PROVIDE FACTORY INSTALLED, PRE-WIRED, NEMA 3 NON-FUSED DISCONNECT.
3. PROVIDE FACTORY INSTALLED HINGED BASE KIT.
4. PROVIDE AND INSTALL ROOFTOP SOLUTIONS 60 12RP GUARD. MECHANICAL CONTRACTOR TO CONTACT ROOFTOP SOLUTIONS AT 800-913-7034.
5. PROVIDE FACTORY INSTALLED HELICAL SPRING AUTOMATIC BELT TENSIONER.
6. INTEGRAL THERMAL OVERLOAD WITH AUTOMATIC RESET.
7. PROVIDE BIRDSCREEN.
8. BACKDRAFT DAMPER IN DUCT BY MECHANICAL CONTRACTOR.
9. STARTER BY ELECTRICAL CONTRACTOR. INTERLOCK WITH LIGHTS BY ELECTRICAL CONTRACTOR.
10. PROVIDE 12" HIGH CURB.
11. PROVIDE FACTORY INSTALLED AND WIRED SPEED CONTROLLER
12. EXISTING EXHAUST FAN TO REMAIN.

OUTDOOR AIR CALCULATION

ROOM NUMBER & NAME	AREA SQ. FT.	NO. OF PEOPLE	REQ'D OA CFM/PERSON	REQ'D OA CFM/SQ FT	TOTAL OSA	REQ'D EXHAUST AIR PER FIXTURE	REQ'D OSA AC-1	REQ'D OSA AC-2	REQ'D OSA AC-3	REQ'D OSA AC-4	REQ'D OSA AC-5
KITCHEN	1170	8	7.50	0.18	270.6		270.60				
SERVICE AREA	120	0	5.00	0.06	7.2		7.20				
RR VESTIBULE	154	0	5.00	0.06	9.2			9.2			
MENS RR	90	0	0.00	0.00	0.0	50/70		0			
WOMENS RR	108	0	0.00	0.00	0.0	50/70		0			
MECH ROOM	90	0	5.00	0.06	5.4			5.4			
TEAM MEMBER AREA	95	3	5.00	0.06	20.7			20.7			
ENTRY	50	0	5.00	0.06	3.0			3.0			
DRIVE THRU	300	4	7.50	0.18	84.0				84.0		
OFFICE	52	1	5.00	0.06	8.1				8.1		
SERVING AREA	200	3	7.50	0.18	58.5				58.5		
DINING	1164	60	7.50	0.18	659.5					659.5	
ORDER AREA	215	1	5.00	0.06	17.9					17.9	
PLAY AREA	285	15	7.50	0.06	137.1						137.1
TOTALS			TOTAL OUTSIDE AIR		100/140	270.60	38.30	150.60	677.40		137.10
			ZONE EFFECTIVENESS		-	0.8	0.8	0.8	0.8		0.8
			REQUIRED OUTSIDE AIR		100/140	338.25	47.88	188.25	846.75		171.38
			PROVIDE OUTSIDE AIR		-	1600	450	800	1000		300

OUTSIDE AIR BASED ON THE 2018 INTERNATIONAL MECHANICAL CODE

KITCHEN & BOH PRESSURIZATION

RETURN AIR FROM SIDE DINING BACK TO KITCHEN	+900
SUPPLY AIR FROM AC-2 TO BOH	+600
NEW AC-1 OA (25 TON-17.5% OA	+1600
NEW EF-1 KITCHEN HOOD #1	-1913
NEW EF-2 KITCHEN HOOD #2	-701
NEW EF-4 KITCHEN HOOD #3	-701
TOTAL	-215

DINING PRESSURIZATION

NEW AC-2 OA (5.0 TON-22.5% OA	+450
NEW AC-3 OA (10.0 TON-20.0% OA	+800
NEW AC-4 OA (10.0 TON-25.0% OA	+1000
NEW AC-5 OA (3.0 TON-15.0% OA	+300
EXISTING EF-3 RESTROOM EXHAUST	-300
RETURN AIR FROM SIDE DINING BACK TO KITCHEN	-900
SUPPLY AIR FROM AC-2 TO BOH	-600
TOTAL	+1150
BUILDING POSITIVE PRESSURE	+935

AIR DEVICE SCHEDULE

MARK	DESCRIPTION	LOCATION	NECK SIZE	FACE SIZE	FRAME TYPE	REMARKS
A	PRICE MODEL APDC ALUMINUM SUPPLY AIR DIFFUSER WITH INDIVIDUALLY ADJUSTABLE CURVED AIR PATTERN CONTROLLERS.	DINING AREA KITCHEN	VARIES	24X24	LAY-IN	1,7
C	PRICE MODEL SMCD STEEL SUPPLY AIR DIFFUSER FIELD ADJUSTABLE AIR PATTERN CONTROLLERS.	ENTRYS	14X14	19"X19"	BEVELLED	1,3,5,6
E	PRICE MODEL 22 DOUBLE DEFLECTION ALUMINUM SIDEWALL SUPPLY GRILLE. FRONT BLADE PARALLEL TO LONG SIDE.	UTILITY	18X10	20X12	SURFACE	1
F	PRICE MODEL 80 EGGCRATE RETURN AIR GRILLE WITH REMOVABLE WHITE CORE. FACTORY FLAT BLACK BACKPAN AND ROUND NECK.	DINING/OFFICE KITCHEN	SEE PLAN	24X24	LAY-IN	1,7
H	PRICE MODEL APDC ALUMINUM SUPPLY AIR DIFFUSER WITH INDIVIDUALLY ADJUSTABLE CURVED AIR PATTERN CONTROLLERS.	OFFICE	12"X12"	24X24	LAY-IN	1,6,7
J	PRICE MODEL SMCD STEEL SUPPLY AIR DIFFUSER FIELD ADJUSTABLE AIR PATTERN CONTROLLERS.	RESTROOMS	10X10	15X15	BEVELLED	1,2,3,5,6
K	PRICE MODEL APD0R ALUMINUM PERFORATED FACE RETURN AIR GRILLE.	RESTROOMS ENTRYS	14X14	16X16	SURFACE	1,4,5,6
L	PRICE MODEL 21 ALUMINUM SIDEWALL RETURN GRILLE. FRONT BLADE PARALLEL TO LONG SIDE.	UTILITY	12X12	14X14	SURFACE	1

NOTES

- MECHANICAL CONTRACTOR SHALL PURCHASE THE AIR DEVICES DIRECTLY FROM TOM BARROW COMPANY. CONTACT MR. SCOTT GEORGE AT 404-351-1010. FOR PRICING AND AVAILABILITY. AIR DEVICES NOT PURCHASED THRU TOM BARROW COMPANY WILL NOT BE ACCEPTED.

REMARKS

1. STANDARD OFF WHITE FINISH.
2. PROVIDE MODEL VCS3 NECK DAMPER.
3. SEE DRAWING M1.1 FOR THROW.
4. PROVIDE MODEL VCR7 NECK DAMPER ON GRILLES IN RESTROOMS.
5. PROVIDE BACKPAN. MC TO SEAL JOINTS WITH MASTIC AND INSULATE EXTERNALLY.
6. FIELD INSULATE BACKPAN AS SHOWN ON DETAIL 1/M3-1.
7. FACTORY INSULATED R-6 BACKPAN.

GREASE ACCESS DOOR SCHEDULE

MARK	OPENING SIZE	DOOR SIZE	REMARKS
A	6.5-H X 12-W	8.5-H X 14-W	1
B	10.5-H X 14-W	12.5-H X 16-W	1
C	5.5-H X 14-W	7.5-H X 16-W	1

1. ACCESS DOORS SHALL BE UL 1978 LISTED OR FIELD FABRICATED, REQUIRE NO TOOLS FOR REMOVAL AND MEET THE REQUIREMENTS OF THE CURRENT EDITION OF THE IMC. ACCESS DOOR ASSEMBLY SHALL BE WELDED IN PLACE TO THE GREASE EXHAUST DUCT AND THE ACCESS DOOR SHALL BE SECURED WITH THUMB SCREWS. ACCESS DOORS SHALL BE SEALED WITH A MINIMUM 1500 DEGREE GASKET MATERIAL EQUIVALENT TO THAT MANUFACTURED BY BRETON INDUSTRIES, INC (800) 363-2491.

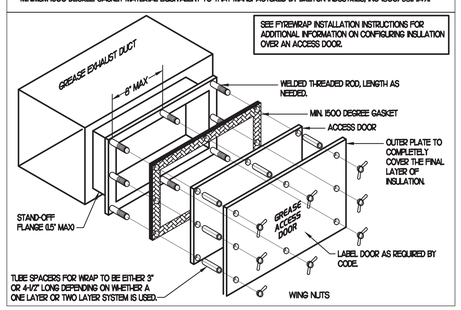

AIR DOOR SCHEDULE

MARK	CFM	VELOCITY	HEATING CAP	HP	AREA SERVED	MODEL	MANUFACTURER	REMARKS
NEW AD#1	17,65	2670 FPM	10 KW	3/4	DRIVE THRU	CHA-1-48E	POWERED-AIRE	1,2,3,5
NEW AD#2	1,977	2443 FPM	10 KW	3/4	DRIVE THRU	CHA-1-36E	POWERED-AIRE	1,2,3
NEW AD#3	3,867	4,218	NA	3/4	REAR DOOR	RBT-1-48	POWERED-AIRE	4

NOTES

- CHICK-FIL-A HAS A NATIONAL ACCOUNT WITH TOM BARROW COMPANY FOR THE AIR DOORS. THE MECHANICAL CONTRACTOR SHALL PURCHASE THE AIR DOORS DIRECTLY FROM TOM BARROW COMPANY. CONTACT MR. SCOTT GEORGE AT 404-351-1010, FOR PRICING AND AVAILABILITY. AIR DOORS NOT PURCHASED THRU TOM BARROW COMPANY WILL NOT BE ACCEPTED.

REMARKS

1. FACTORY PROVIDED, WIRED, AND UNIT MOUNTED SPEED CONTROLLER LOCATED ABOVE CEILING.
2. FACTORY WIRED DISCONNECT.
3. FACTORY PROVIDED, FIELD INSTALLED BY MC, REMOTE W ALL SWITCHES FOR HEATING ON/OFF AND FAN ON/AUTO SWITCH. SEE DETAIL. AIR CURTAIN WIRING DIAGRAM.
4. FACTORY PROVIDED MAGNETIC DOOR CONTACT WITH FACTORY INSTALLED LOW VOLTAGE CONTROLS LOCATED IN AIR DOOR CABINET.
5. PROVIDE WITH A DIVERTER BOX.

Chick-fil-A
5200 Buffington Road
Atlanta, Georgia
30349-2998

INTERPLAN
INTERPLAN LLC
AR99238
CA 8660

ARCHITECTURE
ENGINEERING
PERMITTING

220 E. CENTRAL PKWY, STE 4000
ALTAMONTE SPRINGS, FL 32701
407.645.5008

SEAL:

STACY TREVOR HENSON — REGISTERED ENGINEER — No. 27 — AGRICULTURE — COMMERCIAL — STATE OF TENNESSEE

Stacy T Henson
2024.03.08
17:08:55-05'00'

CHICK-FIL-A
MILLINGTON
8492 US Highway 51 N
Millington
TN 38053

FSU#02699

BUILDING TYPE / SIZE: S08-N-144-R
RELEASE: 23.04
PRINTED FOR
CONSTRUCTION

REVISION SCHEDULE

NO.	DATE	DESCRIPTION

CONSULTANT PROJECT #	2022.0772
DATE	July 2023
DRAWN BY	AE
CHECKED BY	DAK

Information contained on this drawing and in all digital files produced for above named project may not be reproduced in any manner without express written or verbal consent from authorized project representatives.

COPYRIGHT © 2023 INTERPLAN LLC. RESERVED. COPYRIGHT & OTHER RIGHTS RESTRICTING THESE DOCUMENTS TO THE ORIGINAL SITE OR PURPOSE FOR WHICH THEY WERE PREPARED. REPRODUCTIONS, CHANGES OR ASSIGNMENTS ARE PROHIBITED.

SHEET
MECHANICAL SCHEDULES

SHEET NUMBER
M3.1

MARIBR - 03/08/2024 9:49:59 AM

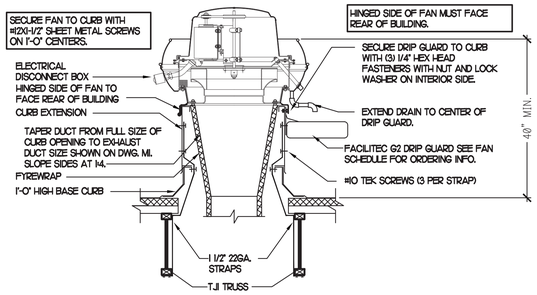

1 KITCHEN HOOD EXHAUST FAN

NO SCALE

CHICK-FIL-A HAS A NATIONAL ACCOUNT WITH TOM BARROW COMPANY FOR THE ROYAL METAL PRODUCTS START COLLARS FOR BOTH WITH AND WITHOUT A MANUAL BALANCING DAMPER. THE MECHANICAL CONTRACTOR IS REQUIRED TO PURCHASE THE ROYAL METAL PRODUCTS START COLLARS DIRECTLY FROM TOM BARROW COMPANY. CONTACT MR. SCOTT GEORGE AT 404-351-1010 FOR PRICING AND AVAILABILITY. ROYAL METAL PRODUCTS START COLLARS NOT PURCHASED THRU TOM BARROW COMPANY WILL NOT BE ACCEPTED.

DAMPER CONTROL HANDLE MUST BE EXPOSED AND DAMPER SHAFT MUST ALWAYS BE PARALLEL TO AIRFLOW IN DUCT MAIN. AS AN EXAMPLE, FOR HORIZONTAL TRUNK DUCT, HANDLE MUST BE LOCATED ON THE LEFT OR RIGHT (9 OR 3 O'CLOCK) OF COLLAR, AND FOR VERTICAL TRUNK DUCT, LOCATED ON THE BOTTOM (6 O'CLOCK) OF COLLAR. DAMPER CONTROL HANDLES NOT INSTALLED IN THE CORRECT ORIENTATION, AS SPECIFIED ABOVE, WILL NOT BE ACCEPTED. ATTACH YELLOW FLUORESCENT CONSTRUCTION RIBBON TO THE HANDLE. RIBBON MUST BE 12" LONG AND BE EASILY IDENTIFIABLE FOR TEST AND BALANCE CONTRACTOR.

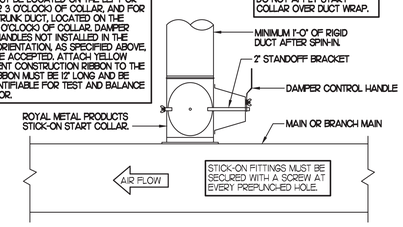

2 START COLLAR

NO SCALE

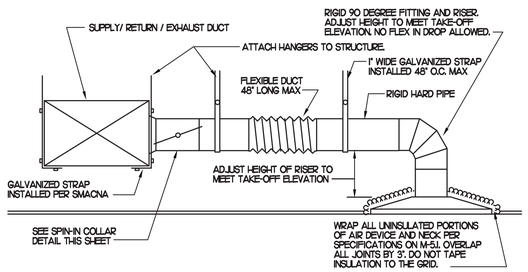

3 SAG/RAG/GRILLE TAKE-OFF

NO SCALE

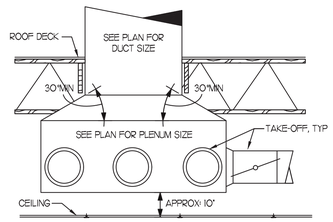

4 RETURN DROP GEOMETRY

NO SCALE

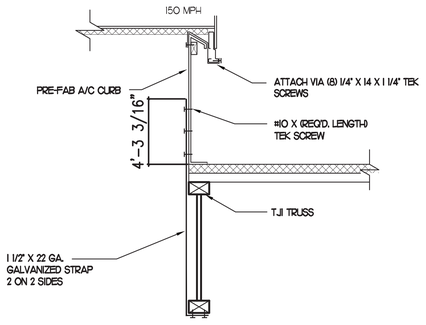

5 RTU TIE-DOWNS DETAIL

NO SCALE

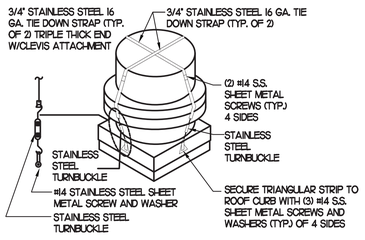

NOTE: SIMILAR FOR KITCHEN HOOD EXHAUST AND SUPPLY FANS.

6 FAN SECURING DETAIL

NO SCALE

TURNING VANE SCHEDULE		
R	SP	GA
2"	1.5"	24
NO TRAILING EDGE. SINGLE THICKNESS CONSTRUCTION.		

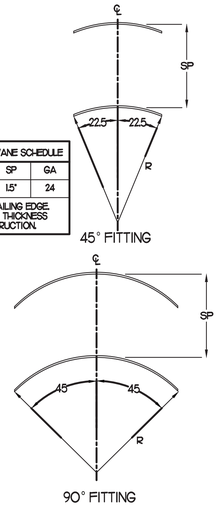

7 TURNING VANES

NO SCALE

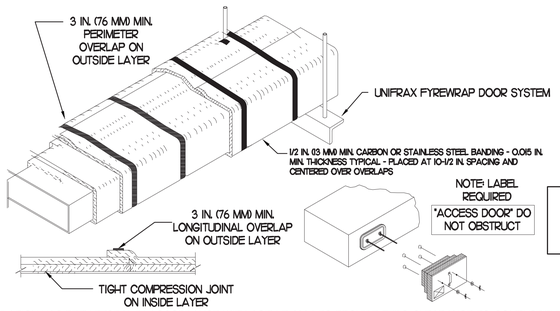

NOTE: LABEL REQUIRED
"ACCESS DOOR" DO NOT OBSTRUCT

FYREWRAP ELIT DUCT INSULATION
COMMERCIAL KITCHEN GREASE DUCT SYSTEM
ASTM E 2336/UCES AC101 SYSTEM
1- & 2-HOUR FIRE-RATED ENCLOSURE, SHAFT ALTERNATIVE
ZERO CLEARANCE TO COMBUSTIBLES
BUTT JOINT SYSTEM (BOTH LAYERS, MAX 24"X24" DUCT)

1. UNIFRAX FYREWRAP ELITE 1.5 DUCT INSULATION HAS BEEN TESTED IN ACCORDANCE WITH ASTM E 2336 TO PROVIDE ZERO CLEARANCE TO COMBUSTIBLES AND MEETS THE REQUIREMENTS FOR ONE OR TWO HOUR ENCLOSURES. THROUGH PENETRATIONS FIRESTOP SYSTEMS ARE TESTED IN ACCORDANCE WITH EITHER ASTM E 814 OR UL 1479. ICC-ES APPROVAL PER REPORT ESR 2213 OR ESR 2832. UNDERWRITER'S LABORATORIES (UL) LISTINGS SHOW COMPLIANCE TO UL 1479 FOR THROUGH PENETRATION FIRESTOP SYSTEMS.
2. COMPLIANT TO THE FOLLOWING CODES:
   - BUILDING CODE: INTERNATIONAL BUILDING CODE EDITION 2012.
   - PLUMBING CODE: INTERNATIONAL PLUMBING CODE EDITION 2012
   - MECHANICAL CODE: INTERNATIONAL MECHANICAL CODE EDITION 2012
   - FUEL GAS CODE: INTERNATIONAL FUEL GAS CODE EDITION 2012
   - ELECTRICAL CODE: NATIONAL ELECTRICAL CODE EDITION 2012
   - ENERGY CODE: INTERNATIONAL ENERGY CONSERVATION CODE
   - FIRE CODE: INTERNATIONAL FIRE CODE EDITION 2012
   - ACCESSIBILITY CODE: ANSI A117.1 EDITION 2009
3. INSULATION APPLIED IN TWO LAYERS WITH TIGHT COMPRESSION JOINT ON INSIDE LAYER AND 3 INCH MINIMUM OVERLAPS ON BOTH PERIMETER AND LONGITUDINAL OVERLAPS ON OUTSIDE LAYER.
4. GREASE EXHAUST DUCT RUNS FROM THE HOOD EXHAUST CONNECTION UP TO THE EXHAUST FAN ON THE ROOF WITH MINIMAL TURNS OR BENDS AND MAINTAINING MINIMUM 1/4 UNIT VERTICAL RISE PER 12 UNITS HORIZONTAL RUN. NFPA 96 COMPLIANT ACCESS DOORS LOCATED AS REQUIRED BY CODE.
5. UNIFRAX FYREWRAP ELITE 1.5 ACCESS DOORS AS SPECIFIED IN ICC-ES BUILDING CODE REPORTS ESR 2213 OR ESR 2832.
6. ROOF MOUNTED EXHAUST FAN IS MOUNTED ON A HINGED BASE WHICH ALLOWS ACCESS TO THE DUCT FROM THE ROOF.
7. SUPPORT HANGER SYSTEMS DO NOT NEED TO BE WRAPPED PROVIDED THE HANGER RODS ARE AT LEAST A MINIMUM OF 3/8 IN. DIAMETER. USE MINIMUM 2 X 2 X 1/8 IN. STEEL ANGLE OR SMACNA EQUIVALENT SUPPORT SYSTEM.
8. UNIFRAX FYREWRAP ELITE 1.5 DUCT ENCLOSURE SYSTEM SHALL BE INSTALLED IN ACCORDANCE WITH MANUFACTURERS INSTRUCTIONS.
9. UNIFRAX FYREWRAP ELITE 1.5 DUCT WRAP SHALL BE INSTALLED ON THE DUCT FROM THE HOOD CONNECTION TO THE CONNECTION TO THE FAN.

8 GREASE EXHAUST DUCT PROTECTION TO COMBUSTIBLES DETAIL

NO SCALE

Chick-fil-A
5200 Buffington Road
Atlanta, Georgia
30349-2998

INTERPLAN
INTERPLAN LLC

AR99238
CA 8660

ARCHITECTURE
ENGINEERING
PERMITTING

220 E. CENTRAL PKWY, STE 4000
ALTAMONTE SPRINGS, FL 32701
407.645.5008

SEAL:

STACY TREVOR HENSON
REGISTERED ENGINEER
No. 23.04
AGRICULTURE
COMMERCE
STATE OF TENNESSEE

Stacy T Henson
2024.03.08
17:08:55-05'00'

CHICK-FIL-A
MILLINGTON
8492 US Highway 51 N
Millington
TN 38053

FSU#02699

BUILDING TYPE / SIZE: S08-N-144-R
RELEASE: 23.04
PRINTED FOR
CONSTRUCTION

REVISION SCHEDULE

NO.	DATE	DESCRIPTION

CONSULTANT PROJECT #	2022.0772
DATE	July 2023
DRAWN BY	AE
CHECKED BY	DAK

Information contained on this drawing and in all digital files produced for above named project may not be reproduced in any manner without express written or verbal consent from authorized project representatives.

COPYRIGHT © 2023 INTERPLAN LLC. RESERVES COPYRIGHT & OTHER RIGHTS RESTRICTING THESE DOCUMENTS TO THE ORIGINAL SITE OR PURPOSE FOR WHICH THEY WERE PREPARED. REPRODUCTIONS, CHANGES OR ASSIGNMENTS ARE PROHIBITED.

SHEET
MECHANICAL DETAILS

SHEET NUMBER
M4.1

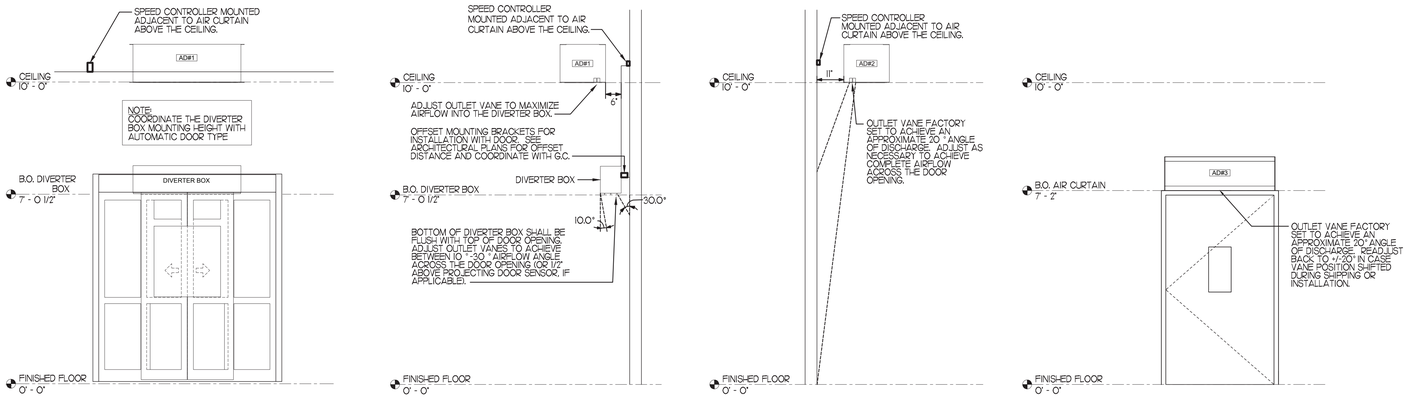

1 AIR CURTAIN AND AIR DIVERTER BOX MOUNTING

NO SCALE

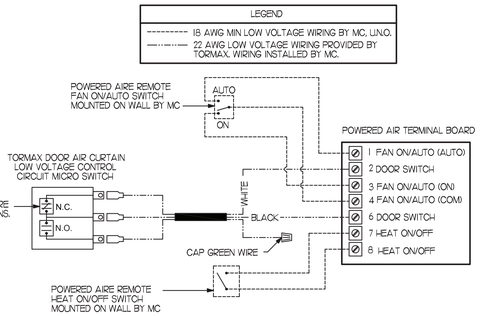

2 AIR CURTAIN WIRING DIAGRAM

NO SCALE

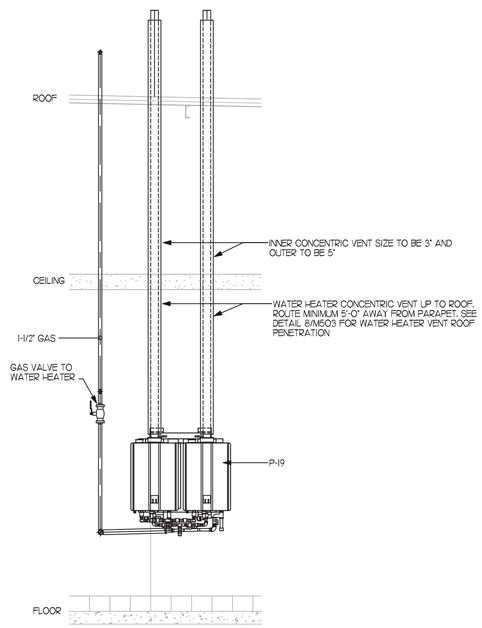

3 WATER HEATER GAS PIPING AND VENTING

NO SCALE

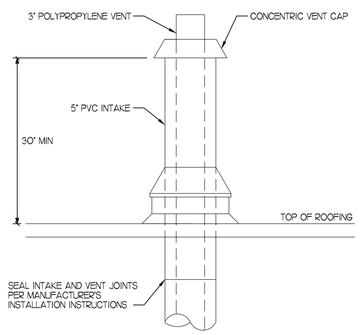

4 WATER HEATER VENT ROOF PENETRATION

NO SCALE

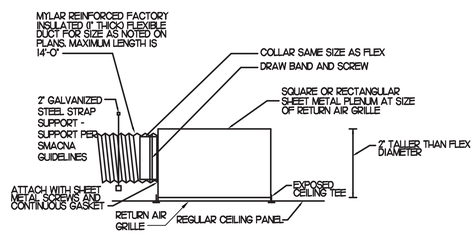

5 TRANSFER AIR GRILLE DETAIL

NO SCALE

Chick-fil-A
5200 Buffington Road
Atlanta, Georgia
30349-2998

INTERPLAN
INTERPLAN LLC

AR99238
CA 8660

ARCHITECTURE
ENGINEERING
PERMITTING

220 E. CENTRAL PKWY, STE 4000
ALTAMONTE SPRINGS, FL 32701
407.645.5008

SEAL:

STACY TREVOR HENSON
REGISTERED ENGINEER
AGRICULTURE
No. 22
STATE OF TENNESSEE

Stacy T Henson
2024.03.08
17:08:56-05'00'

CHICK-FIL-A
MILLINGTON
8492 US Highway 51 N
Millington
TN 38053

FSU#02699

BUILDING TYPE / SIZE: S08-N-144-R
RELEASE: 23.04
PRINTED FOR
CONSTRUCTION

REVISION SCHEDULE

NO.	DATE	DESCRIPTION

CONSULTANT PROJECT #	2022.0772
DATE	July 2023
DRAWN BY	AE
CHECKED BY	DAK

Information contained on this drawing and in all digital files produced for above named project may not be reproduced in any manner without express written or verbal consent from authorized project representatives.

COPYRIGHT © 2023 INTERPLAN LLC. RESERVED. COPYRIGHT & OTHER RIGHTS RESTRICTING THESE DOCUMENTS TO THE ORIGINAL SITE OR PURPOSE FOR WHICH THEY WERE PREPARED. REPRODUCTIONS, CHANGES OR ASSIGNMENTS ARE PROHIBITED.

SHEET
MECHANICAL DETAILS

SHEET NUMBER
M4.2

PROVIDE A PROFESSIONALLY LAMINATED COPY OF THESE DETAILS TO BE INSTALLED INSIDE THE ROOFTOP UNIT CONTROL CABINENT. USE A SETON CHART FRAME STYLE #65624, TELEPHONE NUMBER 800-243-6624, FOR MOUNTING THE DETAIL. ATTACH THE FRAME TO THE INTERIOR OF THE UNIT IN PLAIN AND EASY VIEW OF THE CONTROLS SECTION. CONTACT ENGINEER OF RECORD FOR A REPRODUCIBLE COPY OF THE DETAIL.

SUPPLY SIDE DETECTORS:
IF SUPPLY SIDE SMOKE DETECTORS ARE SHOWN ON DWG M-101, AND CALLED FOR ON RTU SCHEDULE, THE CONTRACTOR IS TO RELOCATE FACTORY INSTALLED SUPPLY SMOKE DETECTOR FROM BLOWER SECTION TO DUCTWORK. SEE NOTES ON DWG M-101.

LEGEND
- - - - 18 AWG MIN WIRING BY MECH CONTRACTOR
——— FACTORY ANNUNCIATOR DETECTOR WIRING
— · — FACTORY LENNOX WIRING

LABELING:
PROVIDE ENGRAVED LABEL WITH 1" HIGH WHITE LETTERS ON BLACK BACKGROUND IDENTIFYING UNIT SERVED.

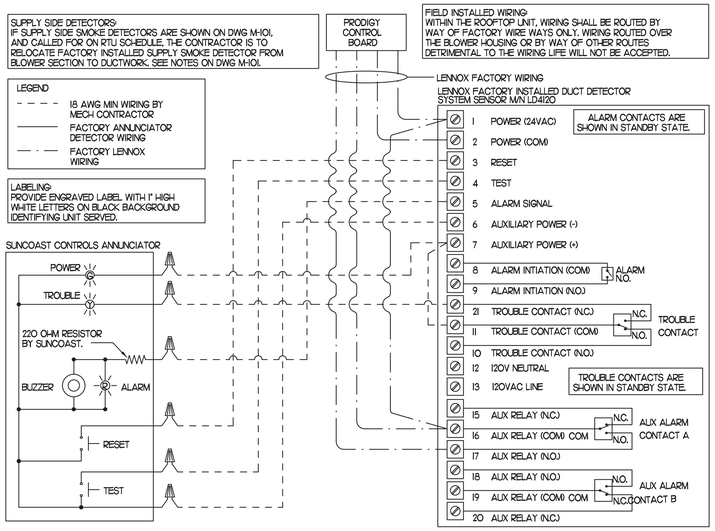

1 SMOKE DETECTOR AND ANNUNCIATOR WIRING DIAGRAM - LENNOX

NOT TO SCALE

NOTES:
1. MECHANICAL CONTRACTOR SHALL MAKE PLASTIC LAMINATE OF THIS DETAIL AND INSTALL PERMANENTLY ON INSIDE DOOR OF ROOFTOP UNIT CONTROL COMPARTMENT.
2. SEE DETAILS THIS SHEET FOR SMOKE DETECTOR AND ANNUNCIATOR WIRING.
3. SET ALL THERMOSTATS FOR AUTO CHANGEOVER.
4. PROVIDE PLASTIC ENGRAVED LABEL AT ALL NEW SENSORS WITH 1/4" HIGH WHITE LETTERING ON BLACK BACKGROUND, I.E. "AC#2 HUMIDITY SENSOR" OR "AC#2 TEMP SENSOR". PLACE LABELS ON WALL ADJACENT TO DEVICE, DO NOT APPLY DIRECTLY TO DEVICE.

KEYED NOTES:
1. LOW VOLTAGE WIRING TO RTU TO BE ROUTED TO UNIT THRU FACTORY WIREWAY.
2. HUMIDITROL UNITS ONLY: WIRING TO HUMIDITY SENSOR TO BE MADE WITH TWO SEPARATE RUNS OF SHIELDED TWISTED PAIR. TERMINATE SHIELD WIRES AT TB-1, LEAVE OPEN AT SENSOR.
3. NETWORK TSTAT REMOTE TEMP SENSOR PROVIDED BY SUNCOAST AND INSTALLED BY MC. SENSOR IS INTENDED TO BE SURFACE MOUNTED AND DOES NOT REQUIRE A SINGLE GANG BOX OF CONDUIT. FIELD CALIBRATE EACH SENSOR.

LEGEND

S.E.C.	SUNCOAST ENVIRONMENTAL CONTROLS (SUPPLIER OF TEMP/FAN CONTROL PANEL) LOCATED IN KITCHEN
1	KEY NOTE REFERENCE
MC	MECHANICAL CONTRACTOR
AC	SUNCOAST RELAY FACTORY INSTALLED AND WIRED IN CFA-500 PANEL, ENERGIZED BY PUTTING STORE SWITCH IN "STORE OCCUPIED" POSITION.
AN	SUNCOAST RELAY FACTORY INSTALLED AND WIRED IN CFA-500 PANEL, DENERGIZED WHEN ANSUL FIRE SUPPRESSION SYSTEM IS ACTIVATED, AS NOTED.
- - -	ALL LOW VOLTAGE CABLING BY MC. ONLY USE CABLE SPECIFIED. NO SUBSTITUTIONS.
— · —	LOW VOLTAGE WIRING BY S.E.C.
———	LINE VOLTAGE BY ELECTRICIAN OR S.E.C.

SHIELDED CABLE BY MC. NETWORK THERMOSTAT W22IP-2003NT CABLE ONLY, 22AWG, 1-PAIR, TWISTED, SHIELDED, WITH DRAIN. PLENUM RATED. NO SUBSTITUTIONS. AFTER DRAIN WIRE TERMINATION, TAPE/INSULATE ALL EXPOSED DRAIN/SHIELD AT SENSOR. DO NOT CONNECT SHIELD/DRAIN WIRE.

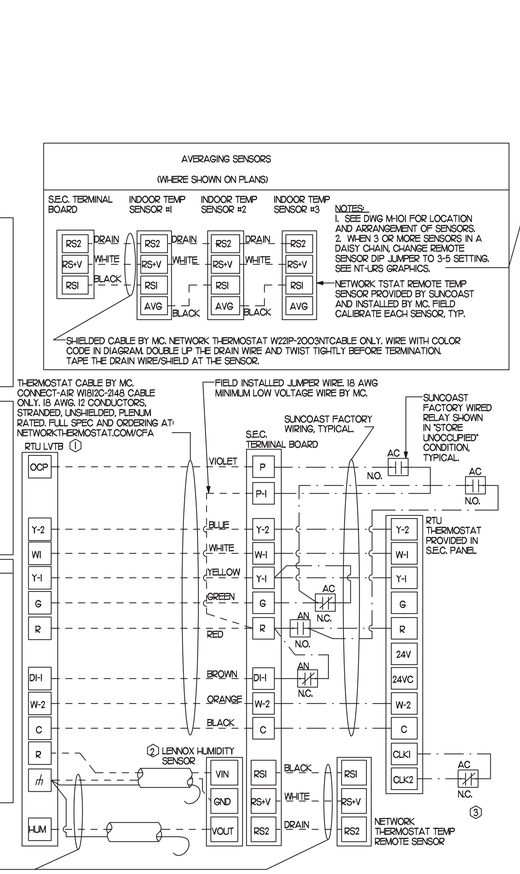

LENNOX PRODIGY 2.0 OR CORE UNIT CONTROLLER SETTINGS:
1. FOR ALL RTUS EXCEPT AC#1, ELIMINATE THE MORNING WARMUP/OSA DAMPER DELAY. THE MENU PATH IS:
   - MAIN MENU > SETTINGS > RTU OPTIONS > EDIT PARAMETERS

   FOR GAS HEAT UNITS (LGT):
   - CHANGE PARAMETER #65 SETTING TO 1

   FOR ELECTRIC HEAT UNITS (LCT):
   - CHANGE PARAMETER #58 TO 1

   ON UNIT AC#1
   - FOR GAS HEAT (LG) LEAVE AT 60-MINUTE DEFAULT
   - FOR ELECTRIC HEAT (LC) CHANGE VALUE TO EQUAL 90-MINUTE
2. FOR HUMIDITROL UNITS THE MENU PATH IS:
   - MAIN MENU > SETTINGS > RTU OPTIONS > DEHUMIDIFIER MODE > NO CONDITIONS

   SELECT LOCAL SENSOR AND SAVE
   - SET POINT: 60%
   - DEHUMID DEADBAND: 2%
3. FOR ALL UNITS, SET BLOWER TO OPERATE AT ONE AIRFLOW FOR ALL MODES. MENU PATH IS:
   - MAIN MENU > INSTALL > TEST AND BALANCE > BLOWER
   - SET ALL HEATING AND COOLING CFM VALUES TO THE SAME VALUE AS SCHEDULED.
   - ADJUST AIRFLOW BY MEANS OF ADJUSTABLE BLOWER MOTOR SHEAVE.

LENNOX FRESH AIR HEATING SETUP WHEN SPECIFIED:
1. INSTALL FRESH AIR TEMPERING KIT WIRING HARNESS AS RECOMMENDED BY LENNOX.
2. LOCATE SUPPLY AIR TEMPERATURE SENSOR IN SUPPLY DUCT DOWNSTREAM OF FIRST ELBOW. SECURE WIRING TO DUCT OR STRUCTURE WITH RUBBER COATED CLAMPS. DO NOT RUN WIRING INSIDE DUCT WORK. PROTECT ALL WIRING PENETRATIONS WITH RUBBER GROMMETS.
3. FOR PRODIGY 2.0 OR CORE UNIT CONTROLLER WITHIN MAIN MENU GO TO SET-UP TO TEST AND BALANCE TO DAMPER. FOLLOW MENU PATH SET FRESH AIR HEATING ENABLE TO "YES" SET FAH SETPOINT TO 65F THIS WILL TEMPER SUPPLY AIR BELOW 65F WITH INTERMITTENT HEATING WHEN THERMOSTAT IS NOT ACTIVELY CALLING FOR HEAT.
4. CHANGE PRODIGY 2.0 OR CORE UNIT CONTROLLER PARAMETER #157. WITHIN MAIN MENU GO TO SETTINGS TO RTU OPTIONS TO EDIT PARAMETER VALUE TO 14 FOR A 14F FAH DEADBAND AND SAVE.
5. CHANGE PRODIGY 2.0 OR CORE UNIT CONTROLLER PARAMETER #158. WITHIN MAIN MENU GO TO SETTINGS TO RTU OPTIONS TO EDIT PARAMETER ADJUST VALUE TO 300 SECONDS FOR 5 MINUTE CYCLE TIME AND SAVE.

2 ROOFTOP UNIT CONTROL WIRING - LENNOX

NOT TO SCALE

Chick-fil-A
5200 Buffington Road
Atlanta, Georgia
30349-2998

INTERPLAN
INTERPLAN LLC
AR99238
CA 8660

ARCHITECTURE
ENGINEERING
PERMITTING

220 E. CENTRAL PKWY, STE 4000
ALTAMONTE SPRINGS, FL 32701
407.645.5008

SEAL:

STACY TREVOR HENSON
REGISTERED ENGINEER
AGRICULTURE
No. 22000
COMMERCIAL
STATE OF TENNESSEE

Stacy T Henson
2024.03.08
17:08:56-05'00'

CHICK-FIL-A
MILLINGTON
8492 US Highway 51 N
Millington
TN 38053

FSU#02699

BUILDING TYPE / SIZE: S08-N-144-R
RELEASE: 23.04
PRINTED FOR
CONSTRUCTION

REVISION SCHEDULE

NO.	DATE	DESCRIPTION

CONSULTANT PROJECT #	2022.0772
DATE	July 2023
DRAWN BY	AE
CHECKED BY	DAK

Information contained on this drawing and in all digital files produced for above named project may not be reproduced in any manner without express written or verbal consent from authorized project representatives.

COPYRIGHT © 2023 INTERPLAN LLC. RESERVED. COPYRIGHT & OTHER RIGHTS RESTRICTING THESE DOCUMENTS TO THE ORIGINAL SITE OR PURPOSE FOR WHICH THEY WERE PREPARED. REPRODUCTIONS, CHANGES OR ASSIGNMENTS ARE PROHIBITED.

SHEET
HVAC CONTROLS

SHEET NUMBER
M4.3

I. SECTION C15000 - MECHANICAL SPECIFICATIONS

PART I - GENERAL

1.01 SCOPE

A. IT IS THE RESPONSIBILITY OF CONTRACTOR TO READ ALL SPECIFICATIONS AND CONSULT ALL DRAWINGS WHICH MAY AFFECT THE INSTALLATION AND COORDINATION OF HIS WORK WITH OTHER TRADES. CONTRACTOR SHALL COORDINATE AND MAKE MINOR ADJUSTMENTS IN LOCATION OF EQUIPMENT AND MATERIALS AS NECESSARY TO SECURE COORDINATION.

B. COMPLETED INSTALLATION SHALL CONFORM TO ALL APPLICABLE FEDERAL, STATE AND LOCAL CODES AND ORDINANCES, INCLUDING BUT NOT LIMITED TO THE LATEST APPROVED EDITIONS OF NFPA-96, NFPA-90A, NFPA-54, SMACNA, ASHRAE 90.1 AND ASHRAE 62.

C. SYSTEM LAYOUT IS SCHEMATIC AND EXACT LOCATIONS SHALL BE DETERMINED BY STRUCTURAL CONDITIONS, COORDINATION WITH OTHER TRADES, COORDINATION WITH FINISHES AND OTHER CONDITIONS. STRUCTURAL SUPPORTS SHALL NOT BE CUT OR ALTERED TO ASSURE FIT OF HVAC SYSTEM. TEN FOOT CLEARANCE SHALL BE MAINTAINED BETWEEN OUTSIDE AIR INTAKES AND EXHAUST FANS AND PLUMBING VENT TERMINALS.

D. CONTRACTOR SHALL BE RESPONSIBLE FOR ALL DEFECTS, REPAIRS AND REPLACEMENTS IN MATERIALS AND WORKMANSHIP FOR A PERIOD OF ONE (1) YEAR AFTER FINAL PAYMENT IS APPROVED. CONTRACTOR SHALL HONOR FACTORY WARRANTIES ON ALL EQUIPMENT PROVIDED AS PART OF THIS SYSTEM.

E. UPON COMPLETION OF PROJECT, ALL SYSTEM EQUIPMENT AND MATERIALS SHALL BE IN NEW, CLEAN CONDITION WITH ALL DAMAGE RESTORED TO CONDITION ACCEPTABLE TO THE OWNERS REPRESENTATIVE. ALL EQUIPMENT, COMPONENTS AND DUCTWORK SHALL BE INSPECTED AND THOROUGHLY CLEANED, READY FOR USE. AT COMPLETION OF JOB, ALL MISCELLANEOUS TOOLS, SCAFFOLDING, SURPLUS MATERIALS, RUBBISH AND DEBRIS SHALL BE REMOVED BY CONTRACTOR.

F. CONTRACTOR SHALL PROVIDE TWO SETS OF 2" MERV 8 OR HIGHER THROW AWAY TYPE FILTERS. A CLEAN SET SHALL BE PROVIDED PRIOR TO TEST AND BALANCE AND AGAIN PRIOR TO OPENING.

PART II - PRODUCTS

2.01 HEATING AND COOLING EQUIPMENT (C15730)

A. FURNISH AND INSTALL R-410A ROOFTOP SINGLE PACKAGE COMBINATION ELECTRIC COOLING AND NATURAL GAS FIRED HEATING UNITS BY LENNOX AS SHOWN ON DRAWINGS. EQUIPMENT SHALL BE ARI CERTIFIED AND A.G.A. AND U.L. LISTED.

B. ACCESSORIES SHALL INCLUDE LOW AND HIGH PRESSURE SAFETIES, CRANK CASE HEATER, OVERCURRENT AND OVERTEMPERATURE SAFETY, COMPRESSOR VIBRATION ISOLATORS, FILTER DRIERS, REFRIGERANT SERVICE VALVES, COIL HAIL GUARDS WHERE SCHEDULED, CONVENIENCE OUTLETS FACTORY INSTALLED ON SCHEDULED UNITS, UNIT MOUNTED NON-FUSED DISCONNECTS, LOW AMBIENT OPERATION DOWN TO 30 DEGREES F AND EVAPORATOR FREEZE STAT.

C. COMPRESSORS SHALL BE FULLY HERMETIC SCROLL TYPE WITH INTERNAL VIBRATION ISOLATORS. COMPRESSORS SHALL BE PROVIDED WITH A MINIMUM FIVE (5) YEAR FULL WARRANTY.

D. THE UNIT HEAT EXCHANGERS SHALL BE STEEL WITH ALUMINIZED STEEL COATING. HEATING CONTROLS SHALL CONSIST OF REDUNDANT GAS VALVES, INTERMITTENT PILOT WITH ELECTRONIC SPARK OR HOT PLATE IGNITION SYSTEM, COMBUSTION/EXHAUST FAN PROTECTED BY CENTRIFUGAL SWITCHES, HEAT LIMIT SWITCHES, TIME-DELAY RELAY, FLAME, AND PILOT SENSORS. ALL UNITS SHALL BE CAPABLE OF TWO STAGES OF HEAT. HEAT EXCHANGES SHALL HAVE A TEN (10) YEAR WARRANTY. BURNERS SHALL BE ALUMINIZED IN-SHOT TYPE. THE DRAFT MOTOR SHALL BE MONITORED BY THE CONTROL SYSTEM.

E. CHICK-FIL-A MAINTAINS A NATIONAL ACCOUNT FOR EQUIPMENT WITH LENNOX CORPORATION. PRICING FOR THE EQUIPMENT HAS BEEN ESTABLISHED IN ADVANCE. CONTACT LENNOX NATIONAL ACCOUNTS AT 800-367-6285 (OR BY FAX AT 972-497-5112) FOR PRICING, ORDERING AND AVAILABILITY.

2.02 DUCTWORK (C15735) (SEE DWG M2.1 FOR ADDITIONAL GREASE DUCT SYSTEM REQ.)

A. ACCEPTABLE MANUFACTURERS OF INSULATION ARE MANVILLE, OWENS CORNING OR KNAUF.

B. ALL DUCTWORK SHALL BE SHEET METAL, UNLESS NOTED OTHERWISE (U.N.O.).

C. DUCT DIMENSIONS SHOWN ARE INSIDE CLEAR DIMENSIONS, U.N.O.

D. CONSTRUCTION OF DUCTWORK SHALL MEET SMACNA 1" W.C. PRESSURE CLASS STANDARD AND RECOMMENDATIONS. SMACNA SHALL BE FOLLOWED WITH RESPECT TO GAGE THICKNESS, JOINTS, REINFORCING, CONSTRUCTION, INSTALLATION AND SUPPORT FOR PRESSURE CLASS STATED. ALL TRANSVERSE JOINTS IN RECTANGULAR AND ROUND DUCT INCLUDING DUCT CONNECTION TO AIR DEVICE COLLAR SHALL BE SEALED PER SMACNA SEAL CLASS C WITH U.L. DUCT MASTIC SEALANT APPROVED FOR INTENDED USE. DUCT TAPE IS NOT AN ACCEPTABLE SUBSTITUTE FOR MASTIC UNLESS EQUAL TO HARDCAST FOIL-GRIP 1402 BUTYL RUBBER ADHESIVE TAPE.

E. DUCT SHALL BE SUPPORTED AT BASE OF DUCT DROPS. CURB DUCT RAILS ARE NOT INTENDED TO AND SHALL NOT SUPPORT THE WEIGHT OF THE DUCT.

F. ALL DUCT INSULATION SHALL MEET MINIMUM R-VALUE REQUIRED BY ASHRAE 90.1 LATEST EDITION. ALL DUCT WRAP SHALL BE MINIMUM 2" THICK, 3/4 PCF AND 5.6 R-VALUE INSTALLED WITH EITHER A VAPOR BARRIER WITH MAXIMUM PERMEANCE 0.05 OR A MINIMUM 2 MIL ALUMINUM REINFORCED FOIL/KRAFT FACING.

G. ALL DUCT DROPS FROM THE ROOFTOP UNITS SHALL BE EXTERNALLY INSULATED.

H. SUPPLY AND RETURN AIR DUCTWORK SERVING ALL AREAS SHALL BE EXTERNALLY INSULATED.

I. ALL AIR CONVEYANCE COMPONENTS SUCH AS, BUT NOT LIMITED TO DUCT, DUCT PLENUMS, GRILLES/DIFFUSERS, BACK PANS, AND BOOTS SHALL BE INSULATED. INSULATION TYPE IS COVERED ELSEWHERE IN THIS SPECIFICATION.

J. RESTROOM RECTANGULAR EXHAUST AIR DUCTWORK SHALL BE LINED WITH 1" THICK, 1-1/2 PCF INSULATION.

K. TRUNK DUCTS SHALL BE ISOLATED FROM UNIT VIBRATION WITH THE USE OF NFPA AND U.L. APPROVED FLEXIBLE CONNECTORS INSTALLED AT THE TOP OF BOTH SUPPLY AND RETURN DROPS.

L. INSULATED FLEXIBLE DUCT MAY BE UTILIZED FOR RUNOUTS TO GRILLES AND DIFFUSERS ONLY IN THE HORIZONTAL POSITION AND IN MAXIMUM LENGTHS OF 4'-0", NO EXCEPTIONS. SEE TAKE-OFF DETAIL ON DRAWING M4.1.

M. CONSTRUCTION OF FLEXIBLE DUCTWORK SHALL INCLUDE SPIRAL METAL HELIX BONDED TO A POLYESTER CORE, FIBERGLASS INSULATION WITH POLYETHYLENE OR MYLAR VAPOR BARRIER. ALL COMPONENTS SHALL HAVE APPROPRIATE U.L. APPROVAL AND SHALL BE EQUIVALENT TO THERMAFLEX MKE.

N. FLEXIBLE DUCT SHALL BE INSTALLED PER THE "ADC FLEXIBLE DUCT PERFORMANCE AND INSTALLATION STANDARDS, 4TH ED" USING FOIL TAPE AND DRAWBAND ON THE INNER CORE AND TAPE OR DRAWBAND ON THE OUTER JACKET.

O. DUCT TAPE SHALL BE EQUAL TO FASSON 181-B FX, 2-1/2" WIDE.

P. SINGLE THICKNESS TURNING VANES SHALL BE INSTALLED AT 90 DEGREE TURNS IN SUPPLY DUCTWORK WHERE ANY ONE DIMENSION IS GREATER THAN 12".

Q. RADIUSED ELBOWS MAY BE SUBSTITUTED FOR 90 DEGREE ELBOWS AT THE DISCRETION OF THE CONTRACTOR. CENTERLINE RADIUS EQUAL TO; R=W PER FIGURE NO. 2-2 IN SMACNA HVAC DUCT CONSTRUCTION STANDARDS.

R. EXTERNAL INSULATION ON BOTTOM OF DUCTS 24" OR WIDER SHALL BE SUPPORTED WITH STICK PINS ON 18" CENTERS. STICK PIN WASHERS SHALL BE COVERED WITH DUCT TAPE OR MASTIC.

2.03 CONTROLS (C15735)

A. SYSTEMS SHALL BE COMPLETE WITH CONNECTIONS TO CFA-500 TEMPERATURE CONTROL PANEL AS MANUFACTURED BY SUNCOAST ENVIRONMENTAL CONTROLS (S.E.C.) (PH: 877-544-6679). THE PANEL IS PROVIDED AND MOUNTED BY THE ELECTRICAL CONTRACTOR. CONTROL WIRING TERMINATIONS ARE BY THE MECHANICAL CONTRACTOR.

B. THE SMOKE DETECTORS SHALL BE FACTORY INSTALLED AND WIRED BY THE ROOFTOP UNIT MANUFACTURER.

C. A FACTORY INSTALLED SMOKE DETECTOR IN THE RETURN AIR SECTION OF EACH AIR CONDITIONING UNIT SHALL STOP THE INDOOR FAN AND CLOSE THE OUTSIDE AIR DAMPER IN THE EVENT OF EXCESSIVE TEMPERATURE OR SMOKE. SMOKE DETECTOR SHALL BE LOCATED PRIOR TO ANY EXHAUST FROM THE BUILDING OR MIXING WITH FRESH AIR MAKE-UP. UPON DETECTION, THE SYSTEM SHALL NOT RESTART UNTIL THE DEVICE IS MANUALLY RESET. DEVICES SHALL BE LOCATED WHERE THEY CAN BE EASILY ACCESSED AND WHERE CLEAR OF FILTERS.

D. CHICK-FIL-A HAS A NATIONAL ACCOUNT WITH SUNCOAST ENVIRONMENTAL CONTROLS FOR THE SMOKE DETECTOR TEST/RESET ANNUNCIATOR STATIONS. THE TEST/RESET STATIONS WILL BE PURCHASED BY THE ELECTRICAL CONTRACTOR AS A PART OF A NATIONAL ACCOUNT PACKAGE AND TURNED OVER TO THE MECHANICAL CONTRACTOR FOR INSTALLATION.

E. THE REMOTE TEST/RESET ANNUNCIATORS SHALL BE PROVIDED BY THE ELECTRICAL CONTRACTOR AND INSTALLED BY THE MECHANICAL CONTRACTOR. INSTALLATION BY MECHANICAL SHALL INCLUDE MOUNTING OF THE ANNUNCIATORS AND ALL WIRING FROM EACH DEVICE TO THE RTU. ELECTRICAL WILL PROVIDE A JUNCTION BOX IN THE WALL WITH 1/2" CONDUIT STUBBED UP ABOVE THE CEILING FOR EACH REMOTE TEST STATION AS SHOWN ON THE ELECTRICAL PLANS. ANNUCIATOR SHALL BE SUNCOAST CONTROLS REMOTE TEST/RESET STATION WITH POWER LED, TROUBLE LED, ALARM LED, 90DB HORN AND TEST/RESET BUTTON.

F. THE RESTROOM FAN SHALL BE INTERLOCKED TO THE LIGHTS SERVING THE MEN AND WOMEN'S RESTROOMS. THE HOOD FANS SHALL BE CONTROLLED VIA THE SUNCOAST CFA-500 CONTROL PANEL. WIRING, RELAYS AND SWITCHES FOR CONTROL OF ALL FANS ARE BY ELECTRICAL CONTRACTOR.

G. LENNOX UNITS - THERMOSTATS ARE PROVIDED AND INTEGRATED INTO THE TEMPERATURE CONTROL PANEL BY SUNCOAST ENVIRONMENT CONTROLS. SUNCOAST WILL PROVIDE A VENSTAR T2700 THERMOSTAT PRE-WIRED IN THE TEMPERATURE CONTROL PANEL. A REMOTE TEMPERATURE SENSOR FOR EACH THERMOSTAT IS ALSO PROVIDED. MECHANICAL CONTRACTOR SHALL INSTALL ALL WIRING BETWEEN THE THERMOSTAT, THE REMOTE SENSOR AND THE ROOFTOP UNIT.

H. MECHANICAL CONTRACTOR SHALL INSTALL CONTROL WIRING IN 1/2" CONDUIT WHERE REQUIRED BY CODE. WHERE NOT REQUIRED TO BE IN CONDUIT, ALL WIRING SHALL BE RUN PARALLEL TO STRUCTURAL MEMBERS OR PERPENDICULAR WITH NO DIAGONAL ROUTING. ALL WIRING SHALL BE SECURED TO THE FRAMING TO PREVENT SAGGING IN RUNS. WIRING TO ROOFTOP UNITS SHALL BE ROUTED THROUGH THE FACTORY THRU-BASE FITTING IN THE UNIT BASE. NO SPLICING OF WIRING WILL BE ACCEPTED. ALL WIRING ABOVE THE ROOF SHALL BE INSTALLED IN EXTERIOR GRADE FLEXIBLE CONDUIT. ALL CONTROL WIRING AND CONTROL WIRING CONDUIT SHALL BE FURNISHED AND INSTALLED BY THE MECHANICAL CONTRACTOR. WIRING SHALL BE INSTALLED IN ACCORDANCE WITH LATEST EDITION OF NEC. ALL LOW VOLTAGE CONTROL WIRING SHALL BE NO LESS THAN 18 AWG MIN. CONTROL WIRING CONDUCTORS SHALL BE SIZED TO ACCOUNT FOR LOAD AND LENGTH OF RUN TO ALLOW SUFFICIENT VOLTAGE AVAILABLE AT CONTROLLED DEVICE TO OPERATE THE SYSTEM RELIABLY.

PART III - EXECUTION

3.01 SCOPE

A. FURNISH AND INSTALL SYSTEM IN ACCORDANCE WITH REFERENCED STANDARDS, APPLICABLE CODES, MANUFACTURER'S RECOMMENDATIONS AND AS INDICATED ON DRAWINGS.

B. OWNER SHALL TEST AND BALANCE MECHANICAL SYSTEM IN ACCORDANCE WITH NCI OR AABC STANDARDS TO ASSURE CONFORMANCE WITH DESIGN. G.C. WILL MAKE MECHANICAL CONTRACTOR AVAILABLE DURING TEST AND BALANCE TO ASSIST TESTING AGENCY AND TO MAKE CORRECTIONS IMMEDIATELY NECESSARY. CONTRACTOR SHALL CORRECT ITEMS ON WRITTEN TEST AND BALANCE REPORT.

C. CONTRACTOR SHALL INSTRUCT THE OWNER'S REPRESENTATIVE IN ALL MATTERS PERTAINING TO THE PROPER MAINTENANCE OF EQUIPMENT FURNISHED UNDER THIS CONTRACT THROUGH DEMONSTRATION AND EXPLANATION OF OPERATING & MAINTENANCE MANUALS.

D. CONTRACTOR SHALL PROVIDE A "SAMPLE MAINTENANCE PROPOSAL" TO THE OWNER'S REPRESENTATIVE IN ALL MATTERS PERTAINING TO THE PROPER MAINTENANCE OF EQUIPMENT FURNISHED UNDER THIS CONTRACT.

E. CONTRACTOR SHALL COMPLETE A/C EQUIPMENT STARTUP DOCUMENTATION PROVIDED BY OWNER.

NATIONAL ACCOUNTS

1. LENNOX EQUIPMENT - CONTACT LENNOX NATIONAL ACCOUNTS AT 800-367-6285 (OR BY FAX AT 972-497-5112) FOR PRICING, ORDERING AND AVAILABILITY. LENNOX EQUIPMENT NOT PURCHASED THRU LENNOX NATIONAL ACCOUNTS WILL NOT BE ACCEPTED.

2. LOREN COOK FAN AND CURB PACKAGE - THE MECHANICAL CONTRACTOR IS REQUIRED TO PURCHASE THE FAN/CURB PACKAGE DIRECTLY FROM TOM BARROW COMPANY. CONTACT MR. SCOTT GEORGE AT 404-351-1010 FOR PRICING AND AVAILABILITY. FANS AND CURBS NOT PURCHASED THRU TOM BARROW COMPANY WILL NOT BE ACCEPTED.

3. PRICE AIR DEVICES - THE MECHANICAL CONTRACTOR IS REQUIRED TO PURCHASE THE AIR DEVICES DIRECTLY FROM TOM BARROW COMPANY. CONTACT MR. SCOTT GEORGE AT 404-351-1010 FOR PRICING AND AVAILABILITY. AIR DEVICES NOT PURCHASED THRU TOM BARROW COMPANY WILL NOT BE ACCEPTED.

4. AIR DOORS - THE MECHANICAL CONTRACTOR IS REQUIRED TO PURCHASE THE AIR DOORS DIRECTLY FROM TOM BARROW COMPANY. CONTACT MR. SCOTT GEORGE AT 404-351-1010 FOR PRICING AND AVAILABILITY. AIR DOORS NOT PURCHASED THRU TOM BARROW COMPANY WILL NOT BE ACCEPTED.

5. SUNCOAST ENVIRONMENTAL CONTROLS - THE CFA 500 PANEL AND THE TEST/RESET STATIONS WILL BE PURCHASED AND PROVIDED BY THE ELECTRICAL CONTRACTOR AS A PART OF A NATIONAL ACCOUNT PACKAGE. SEE PART II PARAGRAPH 3A, 3D, AND 3E OF THE MECHANICAL SPECIFICATIONS FOR MORE INFORMATION.

6. HALTON HOODS - CHICK-FIL-A WILL PURCHASE AND PROVIDE THE HOODS FOR INSTALLATION BY THE MECHANICAL CONTRACTOR. THE MECHANICAL CONTRACTOR SHALL BE RESPONSIBLE FOR RECEIVING THE HOODS. CONTACT HALTON CO. AT 270-237-5600 FOR MORE INFO.

7. ROYAL METAL PRODUCTS START COLLARS - THE MECHANICAL CONTRACTOR IS REQUIRED TO PURCHASE THE START COLLARS DIRECTLY FROM TOM BARROW COMPANY. CONTACT MR. SCOTT GEORGE AT 404-351-1010 FOR PRICING AND AVAILABILITY. START COLLARS NOT PURCHASED THRU TOM BARROW COMPANY WILL NOT BE ACCEPTED.

Chick-fil-A
5200 Buffington Road
Atlanta, Georgia
30349-2998

INTERPLAN
INTERPLAN LLC
AR99238
CA 8660

ARCHITECTURE
ENGINEERING
PERMITTING

220 E. CENTRAL PKWY, STE 4000
ALTAMONTE SPRINGS, FL 32701
407.645.5008

SEAL:

STACY TREVOR HENSON
REGISTERED ENGINEER
AGRICULTURE
No. 22000
STATE OF TENNESSEE

Stacy T Henson
2024.03.08
17:08:57-05'00'

CHICK-FIL-A
MILLINGTON
8492 US Highway 51 N
Millington
TN 38053

FSU#02699

BUILDING TYPE / SIZE: S08-N-144-R
RELEASE: 23.04
PRINTED FOR
CONSTRUCTION

REVISION SCHEDULE

NO.	DATE	DESCRIPTION

CONSULTANT PROJECT # 2022.0772
DATE July 2023
DRAWN BY AE
CHECKED BY DAK

Information contained on this drawing and in all digital files produced for above named project may not be reproduced in any manner without express written or verbal consent from authorized project representatives.

COPYRIGHT © 2022 INTERPLAN LLC. RESERVES COPYRIGHT & OTHER RIGHTS RESTRICTING THESE DOCUMENTS TO THE ORIGINAL SITE OR PURPOSE FOR WHICH THEY WERE PREPARED. REPRODUCTIONS, CHANGES OR ASSIGNMENTS ARE PROHIBITED.

SHEET
MECHANICAL SPECIFICATIONS

SHEET NUMBER
M5.1

		EXHAUST COLLAR			EXHAUST AIR INFORMATION			CAPTURE AIR INFORMATION		S.S. KSA FILTERS			CEILING CLOSURES						
HOOD MODEL	HOOD NUMBER	QTY	LENGTH	WIDTH	CFM	TAB	SP	CFM	SP	FULL	HALF	LED LIGHTS	QTY	CLOSURE HEIGHT	CEILING HEIGHT	HOOD WEIGHT	KBD DAMPER	K FACTOR (CFM = K FACTOR * √DP)	MATERIAL
KVL–2–IC	H–1L	1	8"	8"	709	0.13"	0.23"	47	0.30"	3	–	2	2	TBD	ADVISE	394 LBS	*	1959	EXPOSED SURFACES 18 GA. S.S.
KVL–2–IC	H–1R	1	14"	8"	1204	0.13"	0.22"	80	0.30"	5	–	3	2			669 LBS	*	3365	
KVL–C–IC	H–2	1	8"	8"	701	0.30"	0.39"	30	0.29"	2	–	1	2			245 LBS	*	1291	
KVL–C–IC	H–3	1	8"	8"	701	0.30"	0.39"	30	0.29"	2	–	1	3			245 LBS	*	1291	

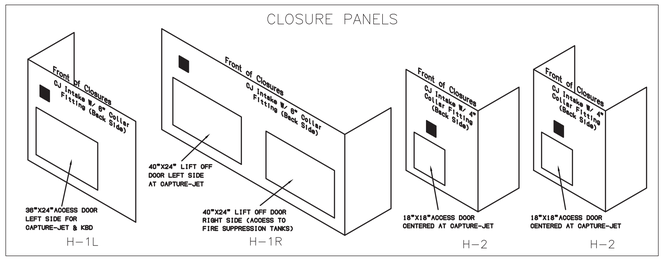

MODEL: KBD CALIBRATED KITCHEN BALANCING DAMPER (EXHAUST VOLUME DAMPER)

TAG	"L"	"W"	QUANTITY
H–1L	8"	8"	1
H–1R	14	8"	1
H–2	8"	8"	1
H–3	8"	8"	1

MATERIAL: FRAME - 16GA CONT. GALV. ADJUSTABLE PANEL 18GA S.S.

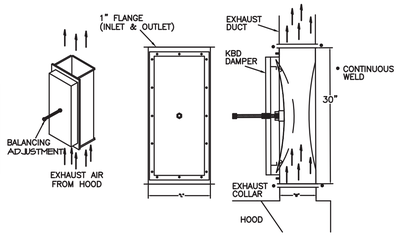

H–1L

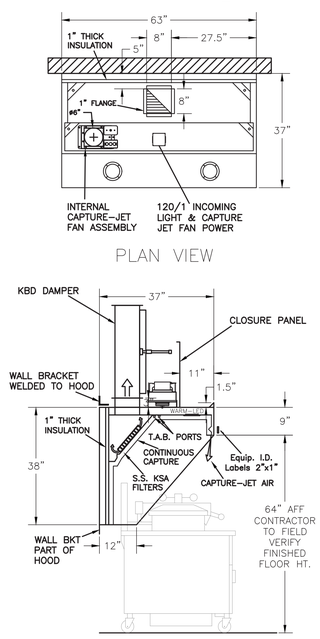

- CEILING CLOSURE RECESSED 11" FROM FRONT TO CREATE SHELF
- 36"X24" ACCESS DOOR LEFT SIDE FOR ACCESS TO CAPTURE–JET WITH FRONT CJ INTAKE & KBD
- CONTINUOUS CAPTURE INTERNAL RIGHT END CUTOUT
- 3" REAR STAND–OFF TO HAVE 1" THICK INSULATION
- EQUIPMENT COVERED:
  (3) PRESSURE FRYERS

H–1R

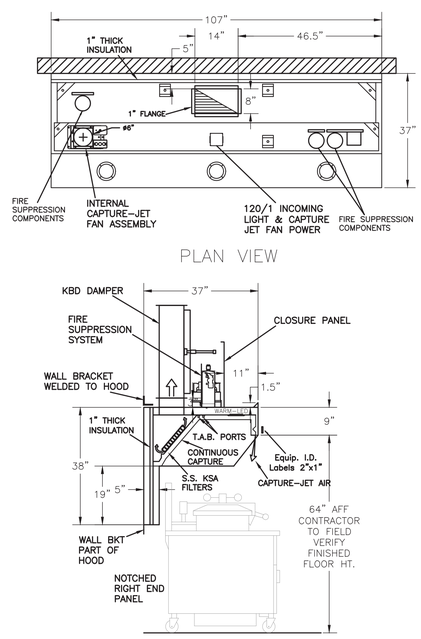

- CEILING CLOSURE RECESSED 11" FROM FRONT TO CREATE SHELF
- FRONT CLOSURE PANEL WITH 40"X24" LIFT OUT DOOR RIGHT SIDE (ACCESS TO FIRE SUPPRESSION
- 40"X24" LIFT DOOR LEFT SIDE AT CAPTURE–JET WITH FRONT CJ INTAKE
- CONTINUOUS CAPTURE INTERNAL LEFT END CUTOUT
- 3" REAR STAND–OFF TO HAVE 1" THICK INSULATION
- NOTCHED RIGHT END PANEL
- EQUIPMENT COVERED:
  (4) PRESSURE FRYERS
  (2) GRILLS
- AMEREX WEIGHT = 264 LBS

H–2

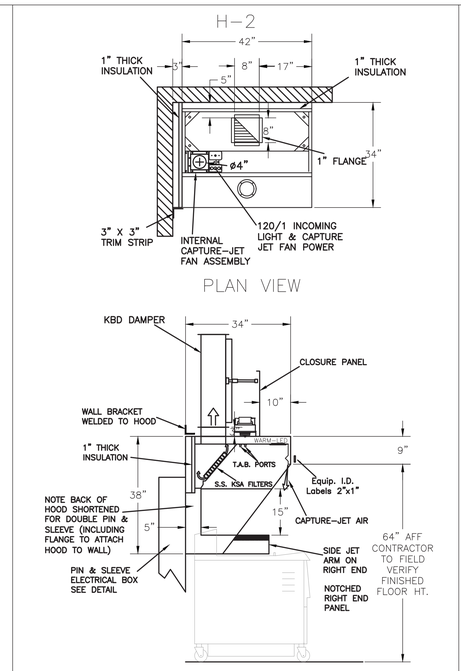

- CEILING CLOSURE RECESSED 10" FROM FRONT TO CREATE SHELF
- 18"X18" ACCESS DOOR CENTERED AT CAPTURE–JET WITH FRONT CJ INTAKE
- NOTCHED RIGHT END PANEL
- DOUBLE RECEPTACLE PIN & SLEEVE
- 3"X3" TRIM STRIP FOR STANDOFF ON LEFT END
- 3" SIDE & REAR STAND–OFF TO HAVE 1" THICK INSULATION
- EQUIPMENT COVERED:
  (2) FRYERS

H–3

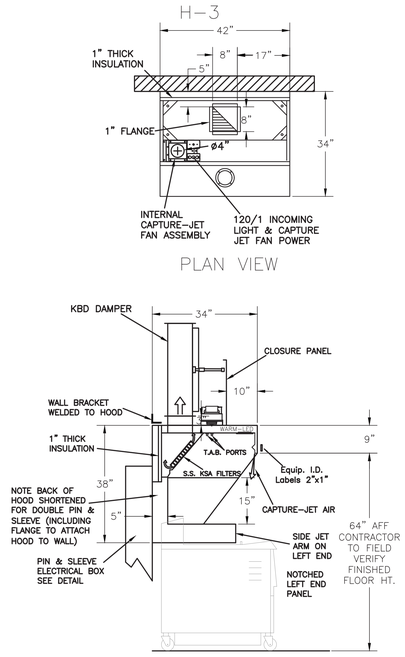

- CEILING CLOSURE RECESSED 10" FROM FRONT TO CREATE SHELF
- 18"X18" ACCESS DOOR CENTERED AT CAPTURE–JET WITH FRONT CJ INTAKE
- NOTCHED LEFT END PANEL
- DOUBLE RECEPTACLE PIN & SLEEVE
- 3" REAR STAND–OFF TO HAVE 1" THICK INSULATION
- EQUIPMENT COVERED:
  (2) FRYERS

THIS DRAWING MUST BE CHECKED, SIGNED AND RETURNED TO THE APPROPRIATE FACTORY. PLEASE VERIFY THE FOLLOWING:
1. ALL DIMENSIONAL INFORMATION, MOUNTING POSITIONS AND WALL CLEARANCES
2. THE LOCATION AND TYPE OF COOKING EQUIPMENT.
NOTE TO APPROVER
ANY CHANGES IN COOKING EQUIPMENT SUCH AS INCREASED ENERGY INPUTS OR EQUIPMENT ADDITIONS MUST BE ADVISED. ADDITIONAL FILTERS MAY BE REQUIRED. IF ANY OF THESE CHANGES OCCUR, A RECALCULATION EXHAUST AIRFLOW MAY BE REQUIRED.
☐ REVISE AND RESUBMIT
APPROVED FOR FABRICATION
☐ WITH NO CHANGES ☐ WITH CHANGES AS NOTED
APPROVED BY DATE

MAIL APPROVED DRAWINGS TO APPROPRIATE FACTORY BELOW:
HALTON CO. (USA) 101 INDUSTRIAL DRIVE SCOTTSVILLE, KY 42164 1–270–237–5600 ☒
HALTON CO. (CANADA) 1021 BREWIK PLACE MISSISSAUGA, ON L4W 3R7 1–905–624–0301 ☐
WEBSITE: www.halton.com

REV.	REVISION DESCRIPTION	BY	DATE

PROJECT: CHICK–FIL–A #2699 MILLINGTON
LOCATION: MILLINGTON, TN
DRAWN BY: SKK DATE: 09.25.23
SCALE: NOT TO SCALE
Halton
DRAWING No.: U23–857–01
SHEET NO.: H–1.1

Chick-fil-A
5200 Buffington Road
Atlanta, Georgia
30349-2998

INTERPLAN
INTERPLAN LLC
AR99238
CA 8660
ARCHITECTURE ENGINEERING PERMITTING
220 E. CENTRAL PKWY, STE 4000
ALTAMONTE SPRINGS, FL 32701
407.645.5008

SEAL:

FOR INFORMATION ONLY

CHICK-FIL-A
MILLINGTON
8492 US Highway 51 N
Millington
TN 38053

FSU#02699

BUILDING TYPE / SIZE: S08-N-144-R
RELEASE: 23.04
PRINTED FOR
CONSTRUCTION

REVISION SCHEDULE

NO:	DATE	DESCRIPTION

CONSULTANT PROJECT #	2022.0772
DATE	July 2023
DRAWN BY	AE
CHECKED BY	DAK

Information contained on this drawing and in all digital files produced for above named project may not be reproduced in any manner without express written or verbal consent from authorized project representatives.

SHEET
HOOD DETAILS

SHEET NUMBER
MH1.1

COPYRIGHT © 2022 INTERPLAN LLC. RESERVED COPYRIGHT & OTHER RIGHTS RESTRICTING THESE DOCUMENTS TO THE ORIGINAL SITE OR PURPOSE FOR WHICH THEY WERE PREPARED. REPRODUCTIONS, CHANGES OR ASSIGNMENTS ARE PROHIBITED.

MARIBR - 03/08/2024 9:51:28 AM

HANGER BRACKET DETAIL

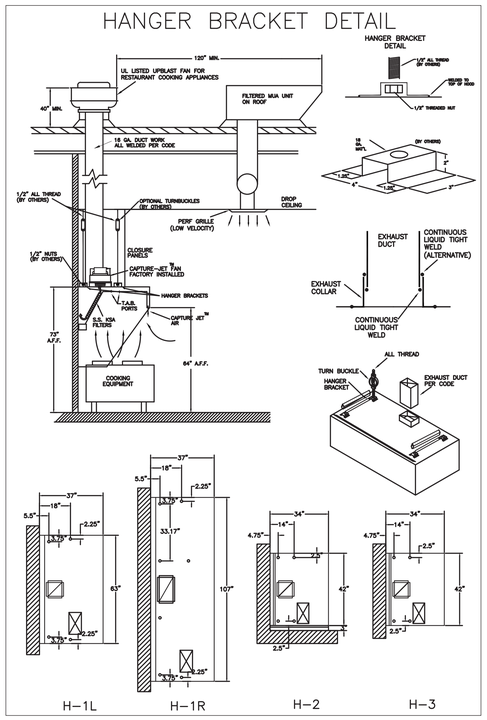

Integral Side Jet Arm

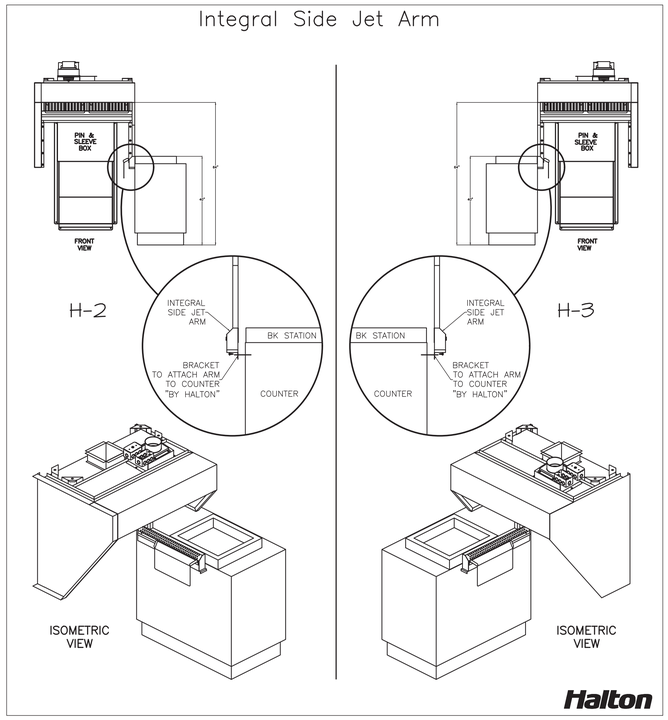

TYPICAL INSTALLATION

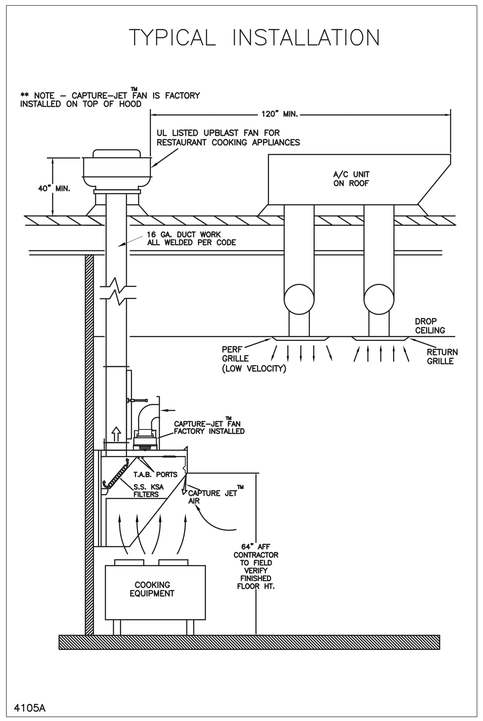

PIN & SLEEVE BOX DETAIL

HOOD #	PIN & SLEEVE LENGTH	RECEPTACLE
H-2	24"	DOUBLE
H-3	24"	DOUBLE

NOTE
THIS DETAIL DEPICTS THE INSTALLATION OF THE DOUBLE RECEPTACLE PIN & SLEEVE ASSEMBLY AT HOOD H-2 & HOOD H-3.

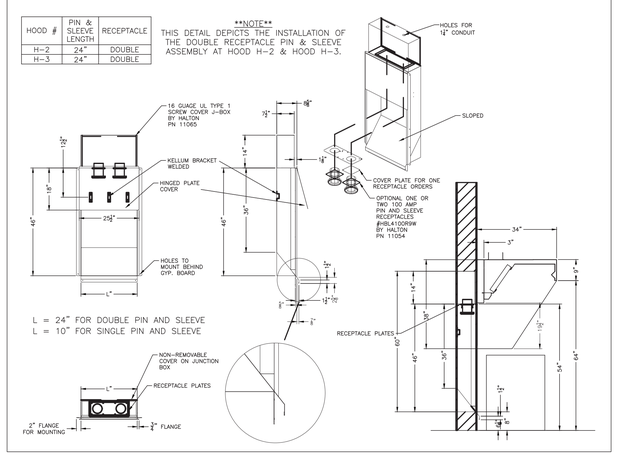

KSA Grease Extractor

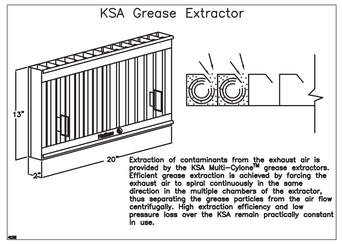

Extraction of contaminants from the exhaust air is provided by the KSA Multi-Cyclone™ grease extractors. Efficient grease extraction is achieved by forcing the exhaust air to spiral continuously in the same direction in the multiple chambers of the extractor, thus separating the grease particles from the air flow centrifugally. High extraction efficiency and low pressure loss over the KSA remain practically constant in use.

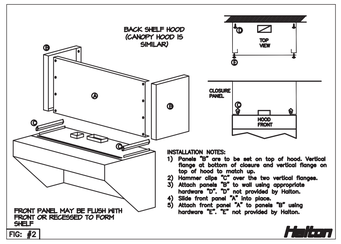

INSTALLATION NOTES:
1) Panels "B" are to be set on top of hood. Vertical flange at bottom of closure and vertical flange on top of hood to match up.
2) Hammer slice "C" over the two vertical flanges.
3) Attach panels "B" to wall using appropriate hardware "D". "D" not provided by Halton.
4) Slide front panel "A" into place.
5) Attach front panel "A" to panels "B" using hardware "E". "E" not provided by Halton.

TYPICAL WIRING OF CAPTURE-JET FAN

BY HALTON
BY ELECTRICIAN

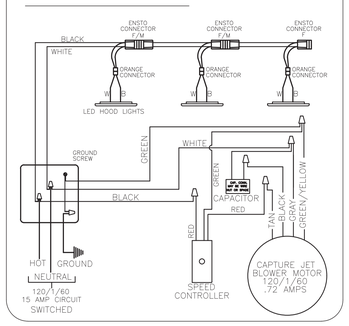

SPLICE STRIP/U-CHANNEL DETAIL FOR HOOD H-1

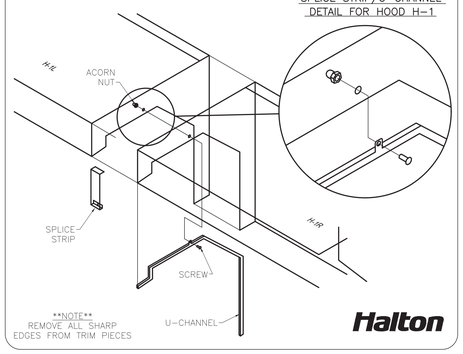

HALTON HOODS
- ETL LISTED PER LATEST 710 STANDARD
- BUILT PER NFPA 96
- NSF LISTED

NSF Halton ETL — CONFORMS TO UL STD UL STD 710 CERTIFIED TO ULC STD S646
INTERTEK 3012225
HALTON COMPANY, 101 INDUSTRIAL DR., SCOTTSVILLE, KY 42164

MODEL NO.	SERIAL NO.	ITEM NO.
KVL-C-IC		

GENERAL REQUIREMENTS

FILTER TYPE EXHAUST HOOD FOR COMMERCIAL AND INSTITUTIONAL KITCHENS
THE FAN CIRCUIT IS RATED FOR 120V, 15A, 60HZ.
THE LIGHTING CIRCUIT IS RATED FOR 120V, 15A, 60HZ.
THE HOOD HAS BEEN CERTIFIED BY ETL FOR 0 INCH CLEARANCE TO COMBUSTIBLE
MATERIALS (TOP, SIDES, FRONT AND REAR) IN COMPLIANCE WITH UL710 WITH CONSIDERATIONS TO NFPA 96.
THE HOOD IS PROVIDED WITH REPLACEABLE KSA FILTERS AND LIGHTING FIXTURES
REPLACE FILTERS ONLY WITH UL CLASSIFIED FILTER TYPE OF THE SAME MODEL AND MANUFACTURER.
SUITABLE FOR USE TO MEDIUM DUTY COOKING APPLIANCES.

DUTY LEVEL	MINIMUM OVERHANG		DISTANCE BETWEEN FRONT EDGE OF HOOD AND COOKING SURFACE, IN		MIN. EXHAUST FLOW AT HOOD LENGTH
	FRONT, IN	SIDE, IN	MIN	MAX	
MEDIUM	0	0	21	31	130

JET SUPPLY AIR FLOW SHALL ONLY BE SET AT 0.30 IN H20

NSF Halton ETL — CONFORMS TO UL STD UL STD 710 CERTIFIED TO ULC STD S646
INTERTEK 3012225
HALTON COMPANY, 101 INDUSTRIAL DR., SCOTTSVILLE, KY 42164

MODEL NO.	SERIAL NO.	ITEM NO.
KVL-2-IC		

GENERAL REQUIREMENTS

FILTER TYPE EXHAUST HOOD FOR COMMERCIAL AND INSTITUTIONAL KITCHENS
THE FAN CIRCUIT IS RATED FOR 120V, 15A, 60HZ.
THE LIGHTING CIRCUIT IS RATED FOR 120V, 15A, 60HZ.
THE HOOD HAS BEEN CERTIFIED BY ETL FOR 0 INCH CLEARANCE TO COMBUSTIBLE
MATERIALS (TOP, SIDES, FRONT AND REAR) IN COMPLIANCE WITH UL710 WITH CONSIDERATIONS TO NFPA 96.
THE HOOD IS PROVIDED WITH REPLACEABLE KSA FILTERS AND LIGHTING FIXTURES
REPLACE FILTERS ONLY WITH UL CLASSIFIED FILTER TYPE OF THE SAME MODEL AND MANUFACTURER.
SUITABLE FOR USE TO HEAVY DUTY COOKING APPLIANCES.

DUTY LEVEL	MINIMUM OVERHANG		DISTANCE BETWEEN FRONT EDGE OF HOOD AND COOKING SURFACE, IN		MIN. EXHAUST FLOW AT HOOD LENGTH
	FRONT, IN	SIDE, IN	MIN	MAX	
MEDIUM	6 (+)	0	20	30	131
MEDIUM	6	0	20	33	106
MEDIUM	6	0	20	36	133
HEAVY	0	3	20	35	191
HEAVY	0	3	20	30	218

4 = SETBACK/UNDERHANG DISTANCE

JET SUPPLY AIR FLOW SHALL ONLY BE SET AT 0.30 IN H20

THIS DRAWING MUST BE CHECKED, SIGNED AND RETURNED TO THE APPROPRIATE FACTORY. PLEASE VERIFY THE FOLLOWING:
1. ALL DIMENSIONS, INFORMATION, MOUNTING POSITIONS AND CLEARANCES.
2. THE LOCATION AND TYPE OF COOKING EQUIPMENT.

NOTE TO APPROVER
ANY CHANGES IN COOKING EQUIPMENT SUCH AS INCREASED ENERGY INPUTS OR EQUIPMENT PLACEMENT MAY ALTER THE EXHAUST AIRFLOW REQUIREMENTS. IF ANY OF THESE CHANGES OCCUR, A RECALCULATION EXHAUST AIRFLOW MAY BE REQUIRED.

☐ REVISE AND RESUBMIT

APPROVED FOR FABRICATION
☐ WITH NO CHANGES ☐ WITH CHANGES AS NOTED

APPROVED BY: DATE

MAIL APPROVED DRAWINGS TO APPROPRIATE FACTORY BELOW:

HALTON CO. (USA)
101 INDUSTRIAL DRIVE
SCOTTSVILLE, KY 42164
1-270-237-5600 ☒

HALTON CO. (CANADA)
1021 BREVIK PLACE
MISSISSAUGA, ON L4W 3R7
1-905-624-0301 ☐

WEBSITE: www.halton.com

REV.	REVISION DESCRIPTION	BY	DATE

PROJECT: CHICK-FIL-A #2699
MILLINGTON

LOCATION: MILLINGTON, TN
DATE: 09.25.23
DRAWN BY: SKK
SCALE: NOT TO SCALE

Halton

DRAWING No.: U23-237-02

SHEET NO.: H-1.2

Chick-fil-A
5200 Buffington Road
Atlanta, Georgia
30349-2998

INTERPLAN
INTERPLAN LLC
AR99238
CA 8660

ARCHITECTURE
ENGINEERING
PERMITTING

220 E. CENTRAL PKWY, STE 4000
ALTAMONTE SPRINGS, FL 32701
407.645.5008

SEAL:

FOR INFORMATION ONLY

CHICK-FIL-A
MILLINGTON
8492 US Highway 51 N
Millington
TN 38053

FSU#02699

BUILDING TYPE / SIZE: S08-N-144-R
RELEASE: 23.04
PRINTED FOR
CONSTRUCTION

REVISION SCHEDULE

NO.	DATE	DESCRIPTION

CONSULTANT PROJECT # 2022.0772
DATE July 2023
DRAWN BY AE
CHECKED BY DAK

Information contained on this drawing and in all digital files produced for above named project may not be reproduced in any manner without express written or verbal consent from authorized project representatives.

SHEET
HOOD DETAILS

SHEET NUMBER
MH1.2

COPYRIGHT © 2023 INTERPLAN LLC. RESERVES COPYRIGHT & OTHER RIGHTS RESTRICTING THESE DOCUMENTS TO THE ORIGINAL SITE OR PURPOSE FOR WHICH THEY WERE PREPARED. REPRODUCTIONS, CHANGES OR ASSIGNMENTS ARE PROHIBITED.

MARIBR - 03/08/2024 9:51:43 AM

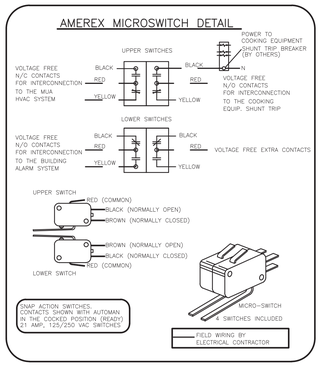

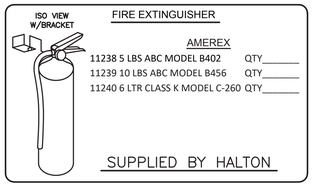

1/2" BLACK IRON SUPPLY LINE REQ'D FROM TANK TO FIRST BRANCH LINE FOR 475 TANKS ONLY!

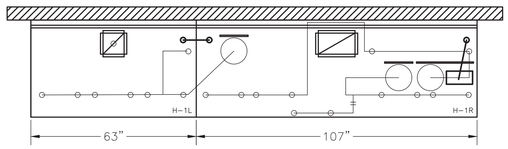

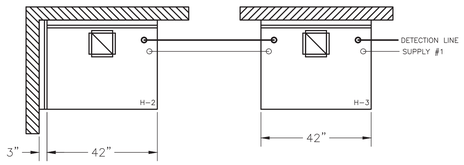

PROTECTS HOODS H-2 & H-3

REMOTE MOUNTED:

(1) SYSTEM ENCLOSURE
(1) MECHANICAL RELEASE MODULE
(1) KP475 AGENT CYLINDER (4.75 GALLON TANK)

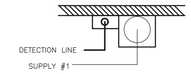

AMEREX FIRE SYSTEM
A) (1) KP375 TANK – 11 FLOW POINTS
(2) KP475 TANKS – 14 FLOW POINTS (MOUNTED ON HOOD H-1R) (FOR HOODS H-1L & H-1R)
B) 1/2" & 3/8" BLACK IRON PIPING W/ 3/8" S.S. APPLIANCE DROPS

(1) MECHANICAL RELEASE MODULE
(2) EXTRA MICRO SWITCH ASSEMBLIES (MOUNTED IN MECHANICAL REL. MODULE)
(1) 3.75 GALLON TANK
(2) 4.75 GALLON TANKS

NOZZLE	QTY	DESCRIPTION
16416	1 EA.	DUCT NOZZLES
11982	1 PER 10'	PLENUM NOZZLES
11982	2 PER FRYER	ALL OPEN FRYERS
13729	2 PER FRYER	ALL PRESSURE FRYERS
14178	1 PER GRILL	ALL GRILLS
ALL APPLIANCE NOZZLES WITH SWIVELS		

* SEE ELEVATION VIEW FOR FIRE SYSTEM DESIGN.

AMEREX FIRE SYSTEM
A) (1) KP475 TANKS – 14 FLOW POINTS (REMOTE MOUNTED) (FOR HOOD H-2 & H-3)
B) 3/8" BLACK IRON PIPING W/ 3/8" S.S. APPLIANCE DROPS

(1) SYSTEM ENCLOSURE
(1) MECHANICAL RELEASE MODULE
(2) EXTRA MICRO SWITCH ASSEMBLIES (MOUNTED IN MECHANICAL REL. MODULE)
(1) KP475 AGENT CYLINDERS (4.75 GALLON TANK)

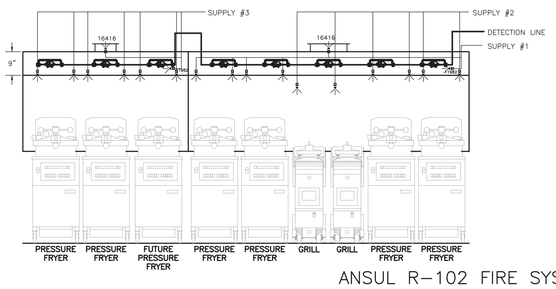

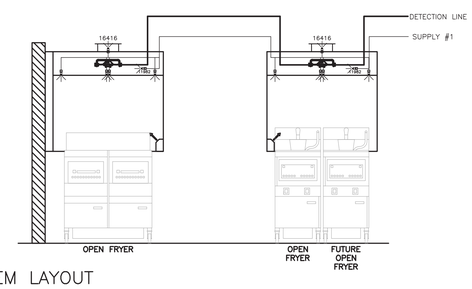

ANSUL R-102 FIRE SYSTEM LAYOUT

AMEREX

FUSIBLE LINK RATINGS

ITEM	TEMP
OPEN FRYERS	450°
2 BURNER / FLAT TOP	450°
PRESSURE FRYERS	450°
GRILL	450°
EXHAUST COLLARS	450°

AMEREX FIRE SYSTEM NOTES
(1) KP375 & (2) KP475 TANK SYSTEM MOUNTED ON TOP OF (H-1R)
MAXIMUM FLOW POINTS = 39

AMEREX FIRE SYSTEM NOTES
KP475 TANK SYSTEM REMOTE MOUNTED
(1) TANK
MAXIMUM FLOW POINTS = 14

ITEM	QTY	DESCRIPTION	FLOW PTS (TOTAL)
16416	4	DUCT NOZZLES	4
11982	4	PLENUM NOZZLES	4
11982	8	APPLIANCE NOZZLES	8
14178	2	APPLIANCE NOZZLES	4
13729	14	APPLIANCE NOZZLES	28
		TOTAL FLOW POINTS	48
ITEM	QTY	DESCRIPTION	
12508-P001	10	DETECTORS BRACKET ASSEMBLY	
13334	1	KP375 AGENT CYLINDER	
17379	3	KP475 AGENT CYLINDER	
18001	1	MECHANICAL RELEASE MODULE W/ DOUBLE POLE MICRO SWITCH	
25851	1	SYSTEM ENCLOSURE W/ DOUBLE POLE MICRO SWITCH	
21481	2	REMOTE MANUAL PULL STATION	

AMEREX FIRE SYSTEM
UL LISTED PER STD LATEST STD 300

1. FINAL INSTALLATION IS TO BE MADE IN ACCORDANCE WITH ALL APPLICABLE CODES
2. ALL ELECTRICAL COMPONENTS FOR EQUIPMENT SHUT DOWN TO BE PROVIDED BY THE ELECTRICIAN. MICRO-SWITCH INSTALLED IN REGULATED RELEASE BY AMEREX INSTALLER
3. REMOTE PULL STATION LOCATED PER MECHANICAL DRAWINGS

THIS DRAWING MUST BE CHECKED, SIGNED AND RETURNED TO THE APPROPRIATE FACTORY. PLEASE REFER TO THE FOLLOWING:

1. ALL DIMENSIONAL INFORMATION, MOUNTING POSITIONS AND CLEARANCES
2. THE LOCATION AND TYPE OF COOKING EQUIPMENT.

NOTE TO APPROVER
ANY CHANGES IN COOKING EQUIPMENT SUCH AS INCREASED ENERGY INPUTS OF EQUIPMENT POSITIONS AND/OR TYPES OF EQUIPMENT MAY ALSO INVALIDATE THE ENGINEERING. ANY OF THESE CHANGES OCCUR, A RECALCULATION EXHAUST AIRFLOW MAY BE REQUIRED.

☐ REVISE AND RESUBMIT

APPROVED FOR FABRICATION
☐ WITH NO CHANGES ☐ WITH CHANGES AS NOTED

APPROVED BY DATE

MAIL APPROVED DRAWINGS TO APPROPRIATE FACTORY BELOW:

HALTON CO. (CANADA)
1021 BREVIK PLACE
MISSISSAUGA, ON L4W 3R7
1-905-624-0301

☒ HALTON CO. (USA)
101 INDUSTRIAL DRIVE
SCOTTSVILLE, KY 42164
1-270-237-5600
WEBSITE: www.halton.com

REV.	REVISION DESCRIPTION	BY	DATE

PROJECT: CHICK-FIL-A #2699 MILLINGTON
LOCATION: MILLINGTON, TN
DRAWN BY: SKK DATE: 09.25.23
SCALE: NOT TO SCALE
Halton

DRAWING No.: U23-857-03
SHEET NO.: H-1.2

Chick-fil-A
5200 Buffington Road
Atlanta, Georgia
30349-2998

INTERPLAN
INTERPLAN LLC
AR99238
CA 8660

ARCHITECTURE
ENGINEERING
PERMITTING

220 E. CENTRAL PKWY, STE 4000
ALTAMONTE SPRINGS, FL 32701
407.645.5008

SEAL:

FOR INFORMATION ONLY

CHICK-FIL-A
MILLINGTON
8492 US Highway 51 N
Millington
TN 38053

FSU#02699

BUILDING TYPE / SIZE: S08-N-144-R
RELEASE: 23.04
PRINTED FOR
CONSTRUCTION

REVISION SCHEDULE

NO.	DATE	DESCRIPTION

CONSULTANT PROJECT # 2022.0772
DATE July 2023
DRAWN BY AE
CHECKED BY DAK

Information contained on this drawing and in all digital files produced for above named project may not be reproduced in any manner without express written or verbal consent from authorized project representatives.

SHEET
HOOD DETAILS

SHEET NUMBER
MH1.3

COPYRIGHT © 2022 INTERPLAN LLC. RESERVES COPYRIGHT & OTHER RIGHTS RESTRICTING THESE DOCUMENTS TO THE ORIGINAL SITE OR PURPOSE FOR WHICH THEY WERE PREPARED. REPRODUCTIONS, CHANGES OR ADDENDUMS ARE PROHIBITED.

MARIBR - 03/08/2024 9:52:03 AM