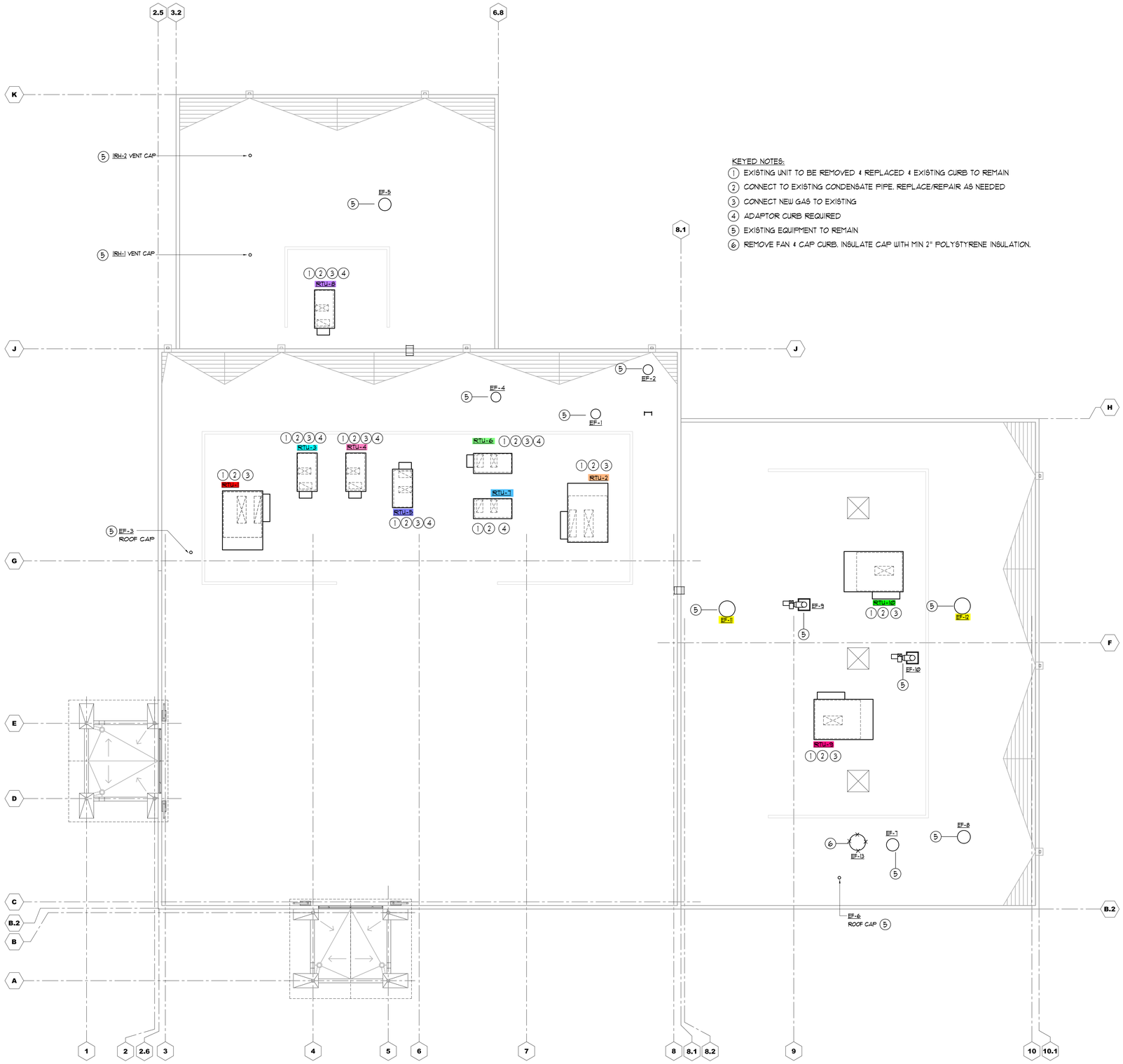

KEYED NOTES:

1. EXISTING UNIT TO BE REMOVED & REPLACED & EXISTING CURB TO REMAIN
2. CONNECT TO EXISTING CONDENSATE PIPE, REPLACE/REPAIR AS NEEDED
3. CONNECT NEW GAS TO EXISTING
4. ADAPTOR CURB REQUIRED
5. EXISTING EQUIPMENT TO REMAIN
6. REMOVE FAN & CAP CURB. INSULATE CAP WITH MIN 2" POLYSTYRENE INSULATION.

N 1 M1.0 ROOF PLAN – HVAC

SCALE: 1/8" = 1'-0"

A.M. CERRA, JR. P.E.
1827 POWERS FERRY ROAD
BLDG # 18, SUITE # 100
ATLANTA, GEORGIA 30339
770-980-0581

22502.01

STATE OF MARYLAND — A.M. CERRA, JR. — REGISTERED PROFESSIONAL ENGINEER

2/X/25

THIS DRAWING IS THE PROPERTY OF A.M. CERRA JR, P.E., AND IS NOT TO BE REPRODUCED IN WHOLE OR IN PART, IS NOT TO BE USED ON ANY OTHER PROJECT AND SHALL BE RETURNED UPON REQUEST. COPYRIGHT AS DATED A.M. CERRA JR, P.E. IS NOT VALID UNLESS SIGNATURE AND SEAL ARE PRESENT.

RELEASED FOR CONSTRUCTION

APPROVAL

CARMAX PE

REVISIONS

REV. NO	DATE	DESCRIPTION

CARMAX
THE AUTO SUPERSTORE

CARMAX, THE AUTO SUPERSTORE, INC.
12800 TUCKAHOE CREEK PKWY, RICHMOND, VA 23238
(804) 747-0422

8901 EXECUTIVE CENTER DRIVE
ELLICOTT CITY, MARYLAND 21043
STORE NO. 7663

PROJECT NO	22502.01
DATE	02/14/25
SHEET TITLE	ROOF PLAN - HVAC
SHEET NO	M1.0

KEYED NOTES:

1. EXISTING SUPPLY REGISTERS AND PLENUM TO REMAIN. CLEAN ALL SUPPLY REGISTERS. REPLACE OR REPAIR EXISTING REGISTERS AS NEEDED.
2. UNIT HEATERS CURRENTLY THIRD STAGE GEAT THRU RTU A56 BOARD. FURNISH NEW HEATING ONLY THERMOSTAT FOR INDEPENDENT UNIT HEATER CONTROL. THE ONLY ACCEPTABLE THERMOSTAT IS LITESTAT TGH2-KRO NON-ADJUSTABLE 68F OCCUPIED 55F UNOCCUPIED. INSTALL AT 48" AFF WHERE INSTALLED ON EXTERIOR WALL FURNISH INSULATED WALL PLATE EQUAL TO ICM CONTROLS ACC-WP04
3. EXHAUST AT THE FLOOR

AIR BALANCE

ITEM	O.A.	EXHAUST
RTU-9 (1)	5,750	
RTU-10 (1)	5,750	
EF-6		(110)
EF-7		300
EF-8		1200
EF-9		1500
EF-10		1800
EF-11		3000
EF-12		3000
TOTAL	11,500	10,910

(1) FAN ON CONTINUOUSLY DURING OCCUPIED

MINIMUM 1 CFM/SF EXHAUST AT THE FLOOR FOR EXEMPTION TO CLASS I DIVISION II PER NEC
NET SERVICE AREA = 5,357 SF
MINIMUM LOW EXHAUST = 5,357 SF(1 CFM/SF)
= 5,357 CFM

TOTAL LOW EXHAUST FROM EF-11 & 12
= (2X3,000)
= 6,000 CFM

MINIMUM EXHAUST PER 2018 IMC MECHANICAL CODE FOR REPAIR GARAGES PER TABLE 403.3 IS .75 CFM/SF
SERVICE AREA = 5,357 SF
MINIMUM EXHAUST = 5,357 SF(.75 CFM/SF)
= 4,018 CFM

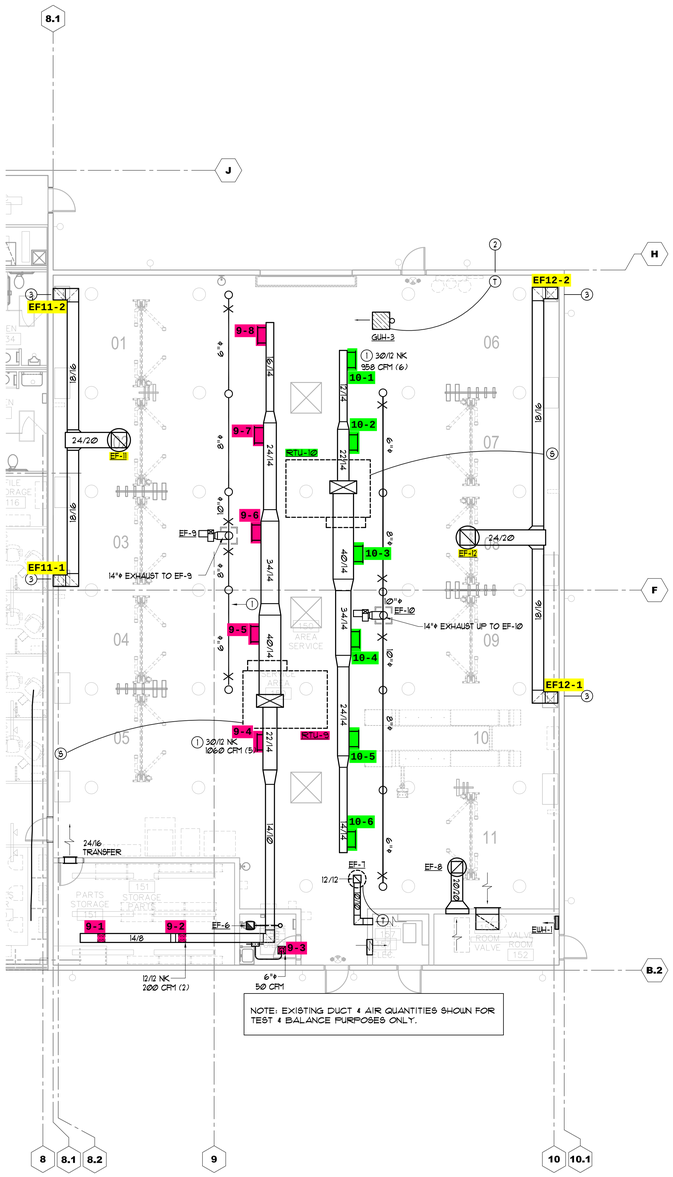

1 M2.0 PART PLAN – HVAC
SCALE: 1/8" = 1'-0"

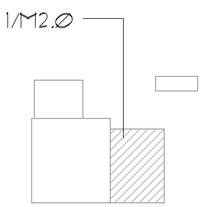

KEY PLAN

A.M. CERRA, JR. P.E.
1827 POWERS FERRY ROAD
BLDG # 18, SUITE # 100
ATLANTA, GEORGIA 30339
770-980-0581

22502.01

STATE OF MARYLAND
REGISTERED PROFESSIONAL ENGINEER
No. 7663
PROFESSIONAL ENGINEER

2/X/25

THIS DRAWING IS THE PROPERTY OF A.M. CERRA JR. P.E. AND IS NOT TO BE REPRODUCED IN WHOLE OR IN PART, IS NOT TO BE USED ON ANY OTHER PROJECT AND SHALL BE RETURNED UPON REQUEST. COPYRIGHT AS DATED A.M. CERRA JR. P.E. IS NOT VALID UNLESS SIGNATURE AND SEAL ARE PRESENT.

RELEASED FOR CONSTRUCTION

APPROVAL

CARMAX PE

REVISIONS

REV. NO	DATE	DESCRIPTION

CARMAX
THE AUTO SUPERSTORE

CARMAX, THE AUTO SUPERSTORE, INC.
12800 TUCKAHOE CREEK PKWY RICHMOND, VA 23238
(804) 747-0422

8901 EXECUTIVE CENTER DRIVE
ELLICOTT CITY, MARYLAND 21043
STORE NO. 7663

PROJECT NO	22502.01
DATE	02/14/25
SHEET TITLE	PART PLAN - HVAC
SHEET NO	M2.0

HVAC GENERAL NOTES

1. ALL CONTROL WIRING SHALL BE PERFORMED IN ACCORDANCE WITH THE LATEST EDITION OF N.F.P.A. 70. ALL WIRING SHALL BE CONCEALED.
2. CONTRACTOR SHALL INSTALL ALL ROOF CURBS FOR ROOFTOP UNITS LEVEL TO HORIZON AT (4) CORNERS.
3. AIR TEST AND BALANCE REQUIRED BY INDEPENDENT T&B CONTRACTOR AABC OR NEBB CERTIFIED. SEE TEST AND BALANCE SCOPE ON THIS SHEET
4. EXISTING SMOKE DETECTORS TO REMAIN AND BE REUSED.
5. LENNOX START UP TECH SHALL PROGRAM THE CORE BOARDS IN ALL NEW RTU'S. CORE BOARDS SHALL BE PROGRAMMED PRIOR TO CSUSA RECOMMISSIONING THE EMS.
6. CONTRACTOR SHALL PROVIDE CLEAN FILTERS IN ROOFTOP UNITS PRIOR TO AIR BALANCE AND AGAIN PRIOR TO OWNER ACCEPTANCE.
7. ALL WORK SHALL BE PERFORMED IN ACCORDANCE WITH THE 2021 INTERNATIONAL MECHANICAL CODE AND THE 2021 INTERNATIONAL FUEL GAS CODE WITH LOCAL AMENDMENTS. ALL EQUIPMENT AND MATERIALS CAPABLE OF BEING U.L. LABELED OR SHALL BEAR THE U.L. LABEL.
8. CONTRACTOR SHALL PROVIDE A GASKET BETWEEN BASE OF ROOF MOUNTED FANS AND ROOF CURBS TO PROVIDE AN AIRTIGHT JOINT.
9. PROVIDE MISCELLANEOUS STEEL AND/OR WOOD BLOCKING AND SUPPORT AT ROOF CURBS AND OPENINGS AS REQUIRED TO SUPPORT ROOF AND EQUIPMENT. SPECIFIC REQUIREMENTS SHALL BE VERIFIED WITH STRUCTURAL ENGINEER AND APPROVED EQUIPMENT DRAWINGS PRIOR TO PLACEMENT.
10. NEW SUPPY AND EXHAUST DUCT SHALL BE 2.0 IN PRESSURE CLASS.
11. NEW DUCT SHALL HAVE PAINT GRIP FINISH AND BE EITHER GALVANNEALED OR MILL PHOSPHATIZED.
12. ANY NEW SUPPLY DUCT SHALL BE INTERNALLY INSULATED WITH 1" DUCT LINER EQUAL TO OWENS CORNING ACOUSTITEX, 1.5 LB DENSITY, R=3.8. NEW EXHAUST DUCT TO ERV'S IS NOT REQUIRED TO BE INSULATED.

PIPING GENERAL NOTES

1. ANY NEW GAS PIPING SHALL BE ASTM A-120, SCHEDULE 40, BLACK STEEL WITH 150 LB. MALLEABLE IRON SCREWED FITTINGS.
2. ANY NEW EXTERIOR GAS PIPE SHALL BE PAINTED WITH RUST PROHIBITIVE PAINT.

ROOFTOP UNIT NOTES

1. CARMAX AUTO SUPERSTORE, LLC HAS A NATIONAL ACCOUNT WITH LENNOX INDUSTRIES, INC., FOR PRICING AND DELIVERY OF PACKAGED ROOFTOP UNITS IN ACCORDANCE WITH THE FOLLOWING. NO SUBSTITUTIONS WILL BE ALLOWED.

   A. ROOFTOP UNITS SHALL BE AS SCHEDULED.

   THE ELECTRICAL PACKAGE SHALL INCLUDE:
   - UNIT DISCONNECT (INSTALLED AND WIRED)
   - BOTTOM GAS/POWER ENTRY
   - STANDARD LOW AMBIENT CONTROL
   - DUAL 120V GFCI TYPE OUTLETS (TO BE FIELD WIRED)
   - GLOBAL DRY BULD ECONOMIZERS W/FAN POWERED EXHAUST (7.5T AND LARGER UNLESS OTHERWISE NOTED)
   - GLOBAL ECONOMIZERS W/BAROMETRIC RELIEF (6T AND SMALLER)
   - STAINLESS STEEL HEAT EXCHANGER AND FRESH AIR TEMPERING FOR BYPASS RTU'S AND RTU 'S THAT HAVE AN ERV
2. THE LENNOX NATIONAL ACCOUNT CONTACT IS:

   RON JOHNSON
   704-621-2606
3. HVAC EQUIPMENT PERFORMANCE CHECK (EPC)

   UPON COMPLETION OF THE HVAC INSTALLATION AND STARTUP, THE OWNER'S SERVICE CONSULTANT, AT THE OWNER'S EXPENSE, IS TO INSPECT THE JOB AND PERFORM AN (EPC). THIS EPC WILL AID THE CONTRACTOR IN CHECKING EACH MACHINE FOR PROPER OPERATION, CHECKING THE CONTROL PANEL AND ADJUSTING CONTROLS AS NECESSARY.

   THE OWNER'S SERVICE CONSULTANT:
   COMFORT SYSTEMS
   ATTN: COURTNEY SWAIN
   P: 317-246-5174
   Courtney.Swain@comfortsystemsusa.com

   ALL PROBLEMS DISCOVERED WITH THE EQUIPMENT OR ITS INSTALLATION (EXCLUDING NOVAR INSTALLATION) SHALL BE CORRECTED BY THE HVAC SUBCONTRACTOR IN ACCORDANCE WITH THE OWNER'S SERVICE CONSULTANT.

   AFTER ALL PROBLEMS HAVE BEEN CORRECTED, CARMAX AUTO SUPERSTORE, LLC SHALL VERIFY ALL EQUIPMENT IS OPERATING PROPERLY THROUGH THE NOVAR CONTROLLERS.

   PRIOR TO PERFORMANCE OF THE EPC, THE CONTRACTOR SHALL HAVE SET AND CONNECTED ALL COMPONENTS, COMPLETED THE POWER WIRING, CONNECTED ALL PIPING, REMOVED ALL SHIPPING BLOCKS, COMPLETED THE STARTUP OF ALL UNITS AND FURNISHED THE PRE-EPC CHECKLIST TO THE OWNER'S SERVICE CONSULTANT.

   THE EPC INCLUDES A FULL WRITTEN REPORT. COPIES WILL BE SENT TO THE GENERAL CONTRACTOR, AND CARMAX AUTO SUPERSTORE, LLC. COPIES OF THE EPC SHALL BE INCORPORATED IN TO THE O & M MANUALS BY THE GENERAL CONTRACTOR.

   A. RTU AIR FILTERS SHALL BE CAMFIL FARR AEROPLEAT III PLEATED, 2" THICK MERV 13, OR EQUAL. MARK FILTERS WITH INSTALLATION DATE

   B. THE PACKAGE COMPONENTS WILL BE CLEARLY LABELED (IN LEGIBLE FORM) ON THE EXTERIOR OF ALL BOXES OR CRATES.

   C. SUBMIT RTU SUBMITTALS IN PDF FORMAT TO THE ENGINEER FOR APPROVAL.

HVAC LEGEND

AFF.	ABOVE FINISHED FLOOR
VD	VOLUME DAMPER
B.O.S.	BOTTOM OF STEEL
B.O.D.	BOTTOM OF DUCT
U.N.O.	UNLESS NOTED OTHERWISE
(symbol) VD	VOLUME DAMPER
(symbol)	SUPPLY GRILLE WITH FLEX DUCT DROP
(symbol)	RETURN/EXHAUST GRILLE
(symbol) R, D	R = RISE, D = DROP
(T)	THERMOSTAT
(S)	LENNOX ROOM TEMPERATURE/HUMIDITY SENSOR 72" AFF
(symbol)	SPIN-IN FITTING
(symbol)	EXISTING DUCT
(symbol)	EXISTING DUCT TO BE REMOVED

CONTROLS SCOPE OF WORK:

EXISTING RTU'S ARE ON LOGIC ONE BUSS. SAVVY COMMUNICATIONS TO IOM ALL RTUS WITH ETM 2051'S I/O IS BY THE INTEGRATED IOM IN THE SAVVY.

1. ALL NEW RTU'S WILL BE BACNET.
2. THE GENERAL CONTRACTOR SHALL RETAIN COMFORT STSTEMS USA (CSUSA) TO FURNISH AND INSTALL CONTROLS AS INDICATED BELOW. THE CONTACT AT CSUSA IS:

   VALERIE BEDEL 317-246-5181
3. PROVIDE PRE-CONSTRUCTION SCREEN SHOTS FROM NOVAR EMS MONITORING TO INCLUDE UNIT STATUS, MODULE COMMUNICATIONS STATUS AND ACTIVE ALARMS.
4. NOT USED
5. CONNECT NEW RTU'S W/CORE BOARDS TO BACNET COMMUNICATION.
6. FOR NEW RTU'S REPLACE RTU NOVAR TEMPERATURE SENSORS WITH LENNOX SENSORS.
7. REPLACE/UPGRADE SAVVY 31 WITH OPUS XCM105 PANEL. SAME BASE PLATE, MINIMAL RE-WIRING REQUIRED.
8. CONNECT BACNET NETWORK AS REQUIRED.
9. TURN OVER SAVVY 31 PANEL AND ETM'S TO CARMAX FOR FUTURE SERVICE CALL INVENTORY SHIP TO COMFORT SYSTEMS USA, ATTN VALERIE BEDEL, CARMAX EMS ACCOUNT CO-ORDINATOR.
10. UPDATE SOFTWARE PER NEW CARMAX TEMPLATE
11. COMMISSION EMS SYSTEM
12. PROVIDE POST CONSTRUCTION SCREEN SHOTS FROM NOVAR EMS MONITORING TO INCLUDE UNIT STATUS, MODULE COMMUNICATIONS STATUS AND ACTIVE ALARMS.
13. LENNOX/CARMAX RTU SET UP SHEET IS TO BE COMPLETED UPON UNIT STARTUP. A COMPLETED SHEET IS TO BE LEFT IN EACH NEW RTU AND A COPY SUBMITTED WITH CLOSE OUT DOCUMENTATION FOR EACH NEW RTU.
14. FURNISH AND INSTALL ADDITIONAL CONTROL WIRE FOR C02 SENSORS AND UNITS WITH HUMIDITROL.
15. ALL CONTROL, COMMUNICATIONS BUS AND SENSOR WIRING, NEW AND EXISTING, IS PART OF THE CONTROLS CONTRACTOR SCOPE OF WORK. REPLACE ANY DAMAGED WIRE.

EXISTING ROOFTOP UNIT SCHEDULE

(SHOWN FOR REFERENCE ONLY)

MARK	ZONE	EER	THERM EFF	VOLT/PH	FAN DATA CFM	TSP IN WC	ESP IN WC	HP	(7) COOLING DATA EAT DB/WB	TOTAL MBH	SENSIBLE MBH	GAS DATA INPUT MBH	OUTPUT MBH	MIN. O/A CFM	MODEL	WEIGHT	(1) REMARKS
RTU-1	SHOWROOM	11.8	80	480/3	6250	1.0	.8	5.0	76.6/64.6	183.1	135.5	260	208	650	LENNOX LGC180H	3000	
RTU-2	SHOWROOM	11.8	80	480/3	6250	1.0	.8	5.0	76.6/64.6	183.1	135.5	260	208	650	LENNOX LGC180H	3000	
RTU-3	CUSTOMER	11.3	80	480/3	1051	.62	.6	1.5	82/67.8	42.7	29.3	78	62.4	300	LENNOX LGA042H	900	
RTU-4	BUSINESS	11.3	80	480/3	1600	.7	.6	1.5	78.1/64.7	48.5	37.7	78	62.4	200	LENNOX LGA048H	900	
RTU-5	BUYERS	11.2	80	480/3	1051	.62	.6	1.5	79.1/65.6	36.1	26.2	78	62.4	200	LENNOX LGA036H	900	
RTU-6	BREAK/CONF	11.3	80	480/3	1200	.63	.6	1.5	77.5/65.8	42.1	28.5	78	62.4	200	LENNOX LGA042H	900	
RTU-7	DATA/PBX	11.0	80	480/3	960	.63	.6	1.5	75/67	34	23	-	-	-	LENNOX LCA036H	900	
RTU-8	SERVICE WRITER	11.3	80	480/3	1400	.68	.6	1.5	78.2/65.6	48	34	78	62.4	300	LENNOX LGA048H	900	
RTU-9	SERVICE AREA (BP)	11.0	80	480/3	7000	1.02	.8	5.0	86.1/71.9	308	188	470	376	6000	LENNOX LGC300H	4900	(2)
RTU-10	SERVICE AREA (BP)	11.0	80	480/3	7000	1.02	.8	5.0	86.1/71.9	308	188	470	376	6000	LENNOX LGC300H	4900	(2)

(1) PROVIDE WITH FACTORY INSTALLED NOVAR CONTROL MODULE: LGA UNIT SERIES (MODEL 2051) LENNOX A56 BOARD, F.A.T.

(2) BY PASS CURB AND BY PASS MIXING BOX

ROOFTOP UNIT SCHEDULE

MARK	ZONE	EER (SEER)	VOLT/PH	FAN DATA CFM	TOT IN WC	ESP IN WC	HP	COOLING DATA (9) EAT DB/WB	TOTAL MBH	SENSIBLE MBH	GAS DATA INPUT MBH	OUTPUT MBH	MIN. O/A CFM	MODEL (1)	WEIGHT	REMARKS (2)(4)(5)(14)
RTU-1	SHOWROOM	12.0	480/3	6250	1.1	.80	5.0	80/67	--	--	260	208	650	LENNOX LGT180H5M	2600	(6) (13)
RTU-2	SHOWROOM	12.0	480/3	6250	1.1	.80	5.0	80/67	--	--	260	208	650	LENNOX LGT180H5M	2600	(6) (13)
RTU-3	CUSTOMER	13.0	480/3	1280	.75	.6	1.0	80/67	--	--	65	53	300	LENNOX LGT048H5E	1050	(6) (12) (15)
RTU-4	BUSINESS	13.0	480/3	1600	.75	.6	1.0	80/67	--	--	65	53	200	LENNOX LGT048H5E	1050	(6) (12) (15)
RTU-5	BUYERS	13.5	480/3	1050	.75	.6	.5	80/67	--	--	65	53	200	LENNOX LGT036H5E	1050	(6) (12) (15)
RTU-6	BREAK.CONF	13.0	480/3	1280	.77	.6	1.0	80/67	--	--	65	53	200	LENNOX LGT048H5E	1050	(6) (12) (15)
RTU-7	DATA/PBX	13.5	480/3	975	.70	.6	.5	72/65	--	--	--	--	--	LENNOX LCT036H5E	900	(15)
RTU-8	SERVICE WRITER	13.0	480/3	1400	.79	.6	1.0	80/67	--	--	65	53	300	LENNOX LGT048H5E	1050	(6) (12) (15)
RTU-9	SERVICE AREA (BP)	10.5	480/3	7000	1.2	.80	5.0	85/71	257	181	480	389	5750	LENNOX LGT302H5M	4500	(3) (7) (8) (10) (11)
RTU-10	SERVICE AREA (BP)	10.5	480/3	7000	1.2	.80	5.0	85/71	257	181	480	389	5750	LENNOX LGT302H5M	4500	(3) (7) (8) (10) (11)

(1) ONLY ACCEPTABLE MANUFACTURER IS LENNOX. SEE "ROOFTOP UNIT NOTES"

(2) FIELD ADJUST SUPPLY FAN R.P.M. TO PROVIDE AIR QUANTITIES AS SCHEDULED ABOVE. INSTALL FIELD-SUPPLIED MOTOR AND/OR DRIVE AS REQ'D

(3) INSTALL F.A.T. DISCHARGE AIR TEMPERATURE SENSOR. SHIPPED LOOSE IN RTU CABINET, INSTALL SENSOR IN SUPPLY IN SUPPLY DUCT APPROX 3FT BELOW ROOF DECK.

(4) BACNET/CORE CONTROL, NEW TEMPERATURE OR COMBO T/H SENSOR.

(5) DRAIN PAN OVERFLOW SWITCH MODEL ZISNSR90AI

(6) HUMIDITROL & COMBO HUMIDITY/TEMPERATURE SENSOR

(7) NEW MIXING BOX, REUSE EXISITNG BYPASS CURB
NEW MIXING BOX RUSKIN DWG FILE 5030632 WITH TWO INTAKE HOODS. SEE DETAIL 2/M4.0

(8) FRESH AIR TEMPERING, 100% OUTSIDE AIR

(9) 95°F CONDENSER AIR

(10) MECHANICAL CONTRACTOR SHALL BE RESPONSIBLE FOR THE CONNECTION OF WIRING HARNESS SHIPPED LOOSE W/ RTU THAT ARE ASSOCIATED WITH OUTSIDE AIR DAMPER.

(11) 7,000 CFM ACROSS THE COIL, 1,250 CFM BYPASSED IN THE CURB, 5,750 CFM TO SUPPLY REGISTERS

(12) ECONOMIZER WITH BAROMETRIC RELIEF

(13) ECONOMIZER WITH POWERED EXHAUST

(14) 2 STAGE HEAT (EXCEPT FOR PBX RTU)

(15) ADAPTER CURB

FAN SCHEDULE

(SHOWN FOR REFERENCE ONLY)

MARK	LOCATIONS AND AREAS SERVED	CFM	ESP IN. WC	MAX FAN RPM	FAN TYPE	DAMPER	VOLT/PH	HP (WATTS)	MANUFACTURER / MODEL	REMARKS
EF-6	SERVICE TOILET	110	.125	950	CEIL MOUNT	BACKDRAFT	120/1	(49)	GREENHECK SP-A110	(1)
EF-7	ELECTRICAL ROOM	300	.125	1550	ROOF CENT	BACKDRAFT	120/1	1/30	GREENHECK G-070-D	(1)
EF-8	VALVE ROOM	1200	.125	1230	ROOF UPBLAST	BACKDRAFT	120/1	1/4	GREENHECK CUBE-121	(1)
EF-9	SERVICE AREA	1500	4.0	2821	BELT DRIVEN UTILITY SET	BACKDRAFT	480/3	1.5	GREENHECK SWB-212	(1)
EF-10	SERVICE AREA	1800	4.0	2923	BELT DRIVEN UTILITY SET	BACKDRAFT	480/3	2.0	GREENHECK SWB-212	(1)
EF-11	SERVICE AREA	3000	.25	1010	ROOF UPBLAST	BACKDRAFT	120/1	3/4	GREENHECK CUBE-181	(1)
EF-12	SERVICE AREA	3000	.25	1010	ROOF UPBLAST	BACKDRAFT	120/1	3/4	GREENHECK CUBE-181	(1)

(1) EXISTING TO REMAIN

TEST & BALANCE SCOPE

MARK	TOTAL AIR ACROSS COIL	OUTSIDE AIR	BYPASS AIR	SUPPLY AIR TO REGISTERS	OTHER
RTU-1 THRU 8	AS SCHEDULED	AS SCHEDULED	--	--	--
RTU-9 & 10	7,000	5,750	1,250	--	AIR QTY AT REGISTERS. SEE 1/M2.0
EF- 11 & 12	--	--	--	--	EXHAUST AT FAN AS SCHEDULED

SUGGESTED TEST & BALANCE PROCEDURE FOR BYPASS UNITS:

RTU- 9 & 10

1. CLOSE BYPASS DAMPER & MAKE AIR QTY 7,000 CFM.
2. GRADUALLY OPEN BYPASS DAMPER UNTIL OUTSIDE AIR IS 5750 CFM. THIS MEANS 1250 CFM IS BEING BYPASSED IN THE CURB
3. OUTSIDE AIR SHOULD EQUAL SUM OF SUPPLY AIR AT THE REGISTERS

A.M. CERRA, JR. P.E.
1827 POWERS FERRY ROAD
BLDG # 18, SUITE # 100
ATLANTA, GEORGIA 30339
770-980-0581

22502.01

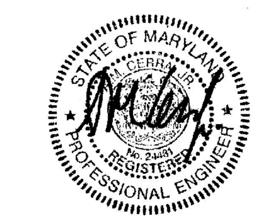

2/X/25

THIS DRAWING IS THE PROPERTY OF A.M. CERRA JR. P.E. AND IS NOT TO BE REPRODUCED IN WHOLE OR IN PART, IS NOT TO BE USED ON ANY OTHER PROJECT AND SHALL BE RETURNED UPON REQUEST. COPYRIGHT AS DATED A.M. CERRA JR. P.E. IS NOT VALID UNLESS SIGNATURE AND SEAL ARE PRESENT.

RELEASED FOR CONSTRUCTION

APPROVAL

CARMAX PE

REVISIONS

REV. NO	DATE	DESCRIPTION

CARMAX
THE AUTO SUPERSTORE

CARMAX THE AUTO SUPERSTORE, INC.
12800 TUCKAHOE CREEK PKWY RICHMOND, VA 23238
(804) 747-0422

8901 EXECUTIVE CENTER DRIVE
ELLICOTT CITY, MARYLAND 21043
STORE NO. 7663

PROJECT NO	22502.01
DATE	02/14/25
SHEET TITLE	SCHEDULES−HVAC
SHEET NO	M3.0

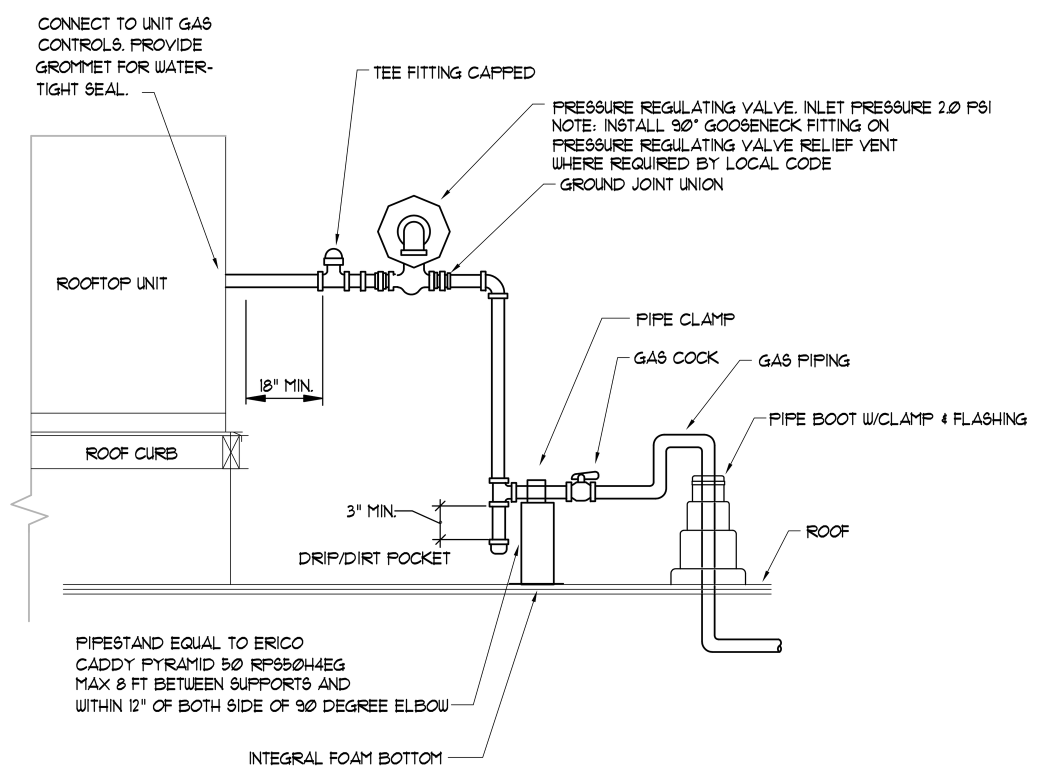

1 / M4.0 RTU GAS CONNECTION DETAIL

NOT TO SCALE

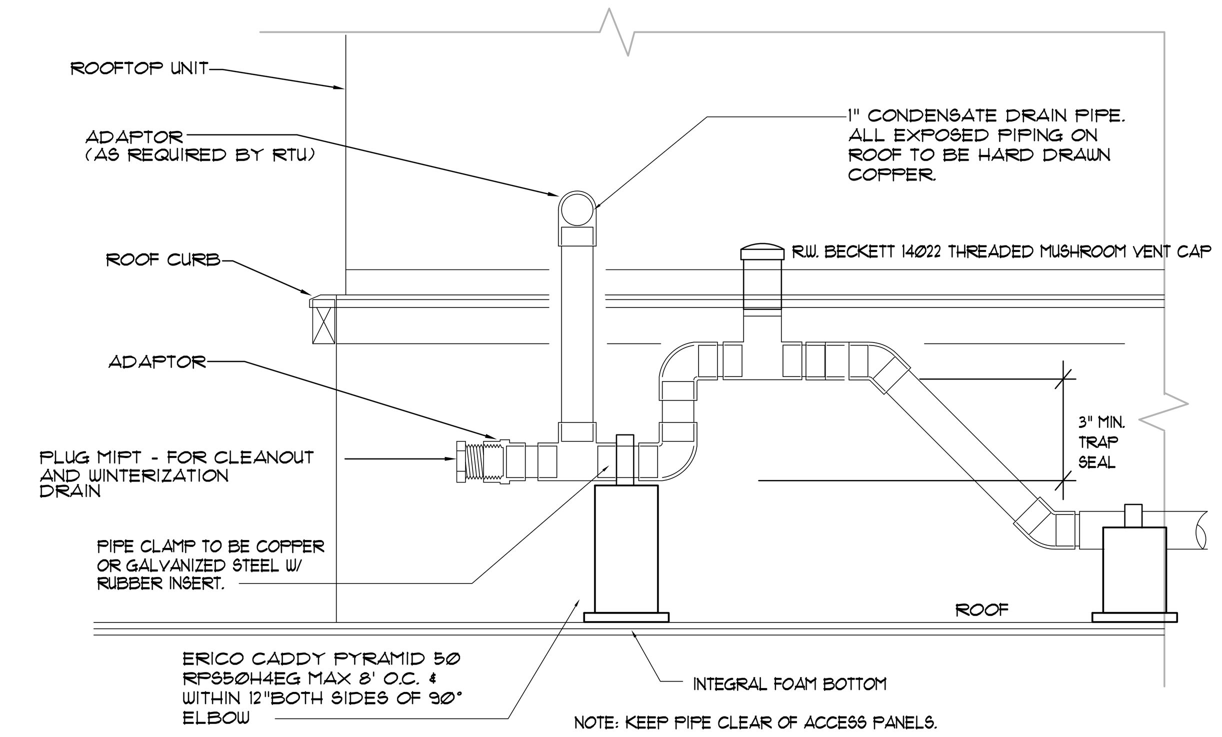

3 / M4.0 RTU CONDENSATE DRAIN DETAIL

NOT TO SCALE

A.M. CERRA, JR. P.E.
1827 POWERS FERRY ROAD
BLDG # 18, SUITE # 100
ATLANTA, GEORGIA 30339
770-980-0581

22502.01

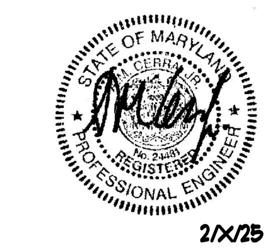

SEE NEW MIXING BOX DETAIL THIS SHEET

RUSKIN ROOFTOP SYSTEMS

SPECIFICATION DATA FOR LENNOX LGA / LCA 156 - 360 LHA 180-240

RRS MODEL#: 50-307-3*
BYPASS MIXING BOX

Features
1. Heavy gauge construction.
2. Color coordinated with the unit.
3. Fully insulated with 1" fiberglass insulation 1.5 lb. density.
4. Access doors on both sides.
5. Factory wired and tested.
6. Low leak gasketed dampers.
7. **Mixing Box must be sealed weather tight to RTU in field during installation.**

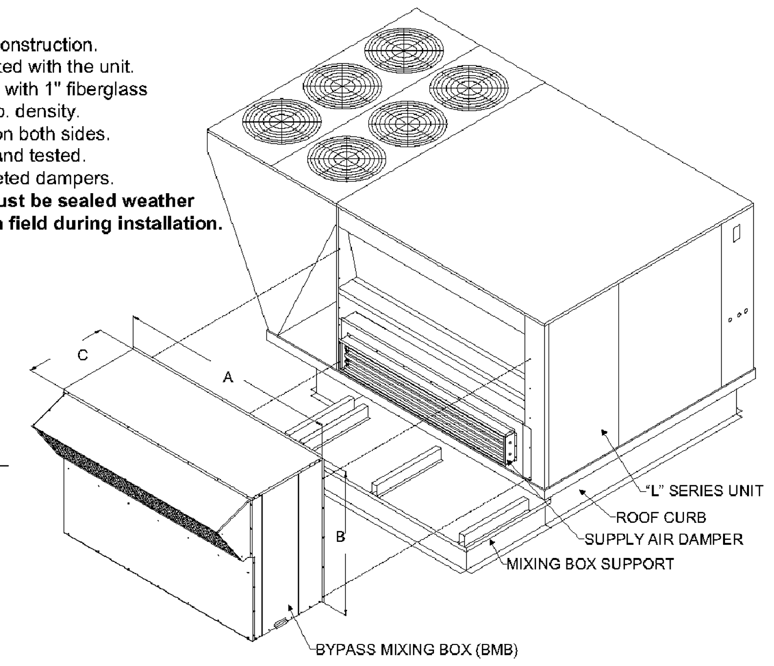

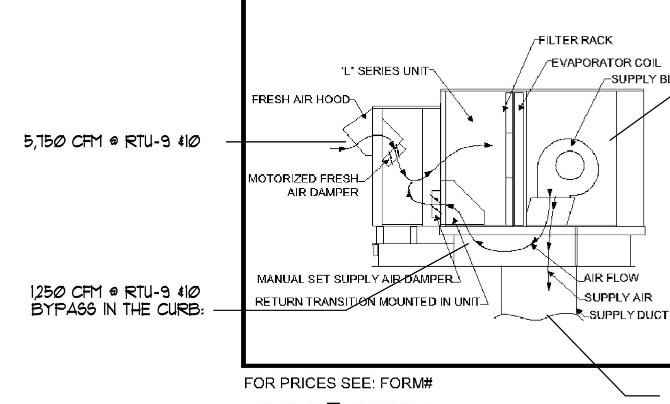

RRS PART#	LENNOX UNIT#	A	B	C	NET WEIGHT
50-307-32	LGA/LCA 156-300S LHA 180-240	69 7/8	50	30 1/8	550
50-307-33	LGA/LCA 300H-360	81 1/8	53 5/8	30	600

FOR PRICES SEE: FORM# — MAY 10, 2010 FORM# LXMB32 SUPERCEDES 08-02-05

RUSKIN ROOFTOP SYSTEMS 1625 Diplomat Drive, Carrollton, Texas 75006-6848 Phone (972) 247-7447 (800) 552-4822 Fax (972) 243-0940

4 / M4.0 MIXING BOX DETAIL

NOT TO SCALE

ROOFTOP SYSTEMS, INC.

SPECIFICATION DATA FOR CARMAX LGA / LCA 156 - 360 LHA 180-240

RSI MODEL: 50-275-32
ROOF CURB
W/ BYPASS MIXING BOX SUPPORT

Features:
1. Roof curb is built to NRCA standards.
2. Roof curb is constructed of 16 gauge G90 steel.
3. Curb and mixing box support ships completely welded in one piece.
4. Full perimeter 2 x 4 wood nailer.
5. Supply plenum completely insulated and assembled.
6. Net weight of curb is 650 lbs.

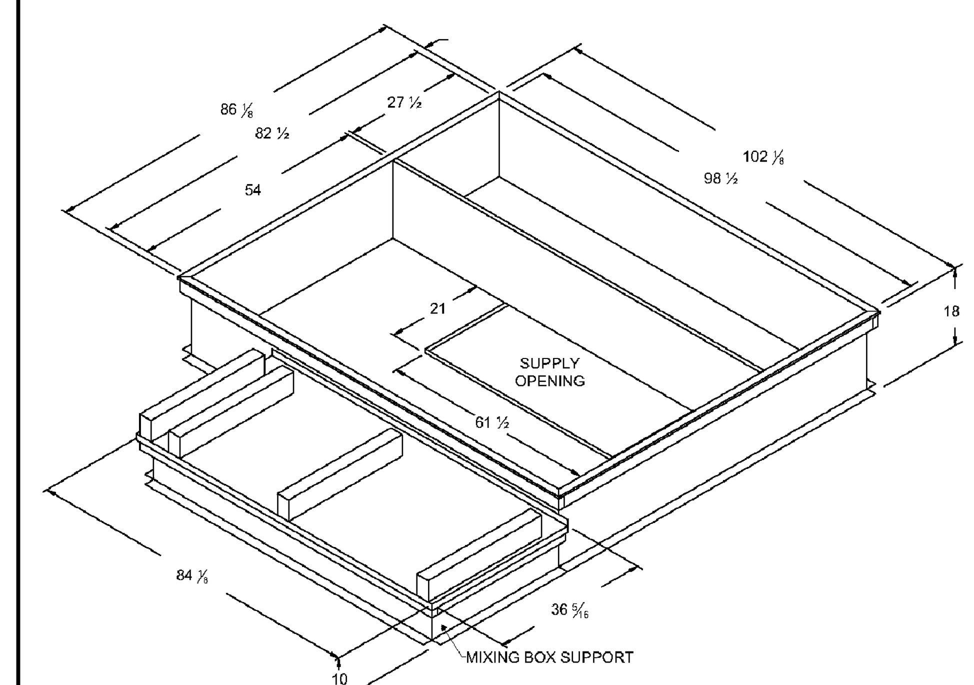

NOTE: BYPASS CURBS ARE EXISTING TO REMAIN. SHOWN FOR GENERAL INFORMATION ONLY

FOR PRICES SEE: FORM# LX-CM-LP01 — SEPTEMBER 27, 2006 FORM# LXCMHCRB32 SUPERCEDES 12-04-02

ROOFTOP SYSTEMS, INC. 2405 McIver Lane, Carrollton, Texas 75006-6510 Phone (972) 247-7447 (800) 552-4822 Fax (972) 243-0940

5 / M4.0 BYPASS CURB DETAIL

NOT TO SCALE

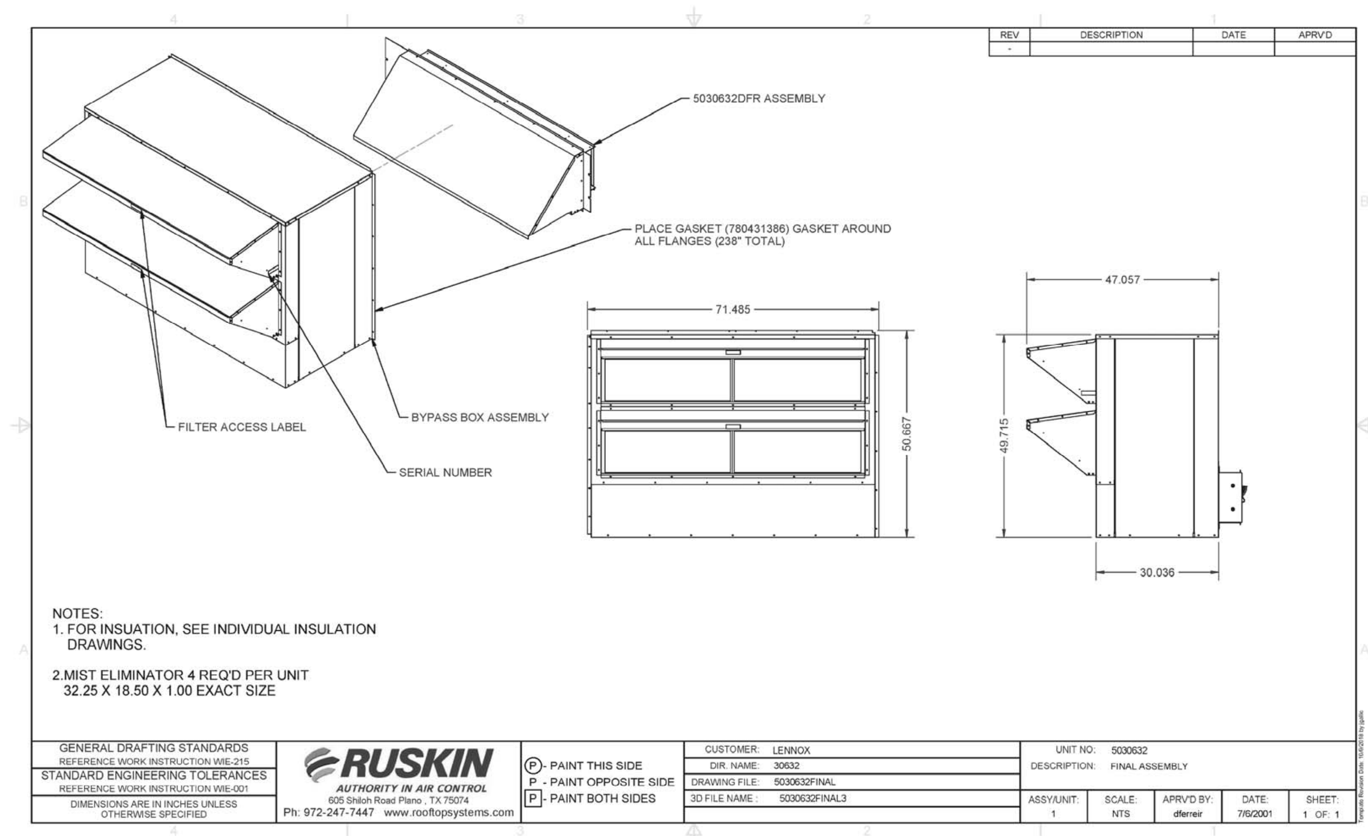

2 / M4.0 NEW MIXING BOX

NOT TO SCALE

THIS DRAWING IS THE PROPERTY OF A.M. CERRA JR. P.E. AND IS NOT TO BE REPRODUCED IN WHOLE OR IN PART, IS NOT TO BE USED ON ANY OTHER PROJECT AND SHALL BE RETURNED UPON REQUEST. COPYRIGHT AS DATED A.M. CERRA JR. P.E. IS NOT VALID UNLESS SIGNATURE AND SEAL ARE PRESENT.

RELEASED FOR CONSTRUCTION

APPROVAL

CARMAX PE

REVISIONS

REV. NO	DATE	DESCRIPTION

CARMAX THE AUTO SUPERSTORE

CARMAX THE AUTO SUPERSTORE, INC.
12800 TUCKAHOE CREEK PKWY RICHMOND, VA 23238
(804) 747-0422

8901 EXECUTIVE CENTER DRIVE
ELLICOTT CITY, MARYLAND 21043
STORE NO. 7663

PROJECT NO	22502.01
DATE	02/14/25
SHEET TITLE	DETAILS–HVAC
SHEET NO	M4.0