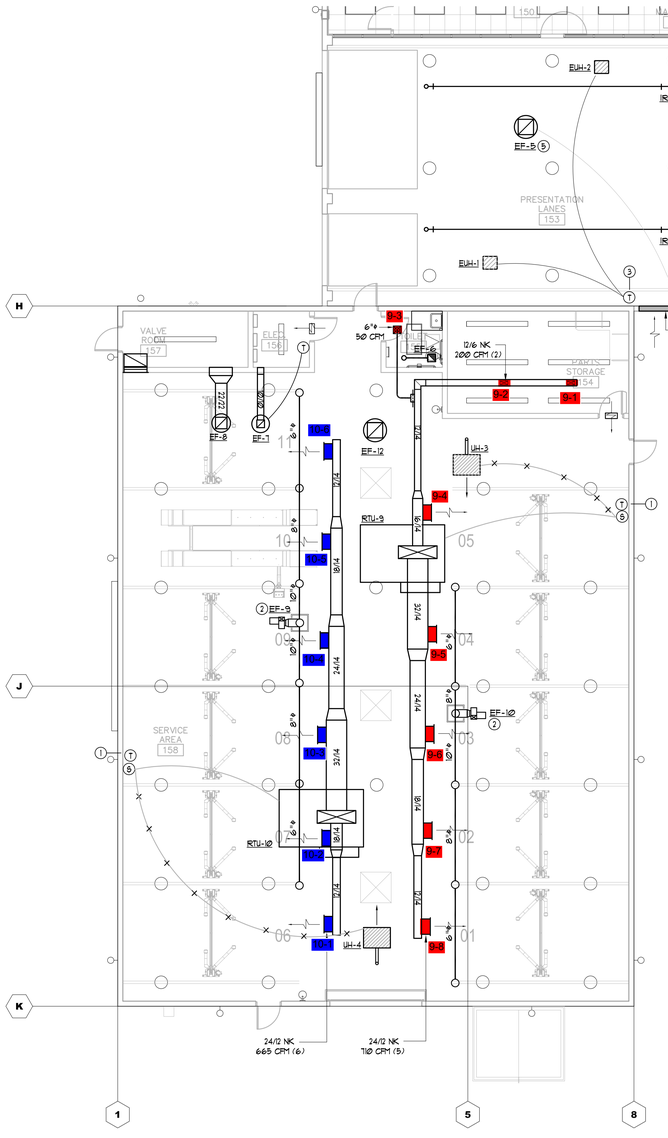


NOTE: SHOWN FOR TEST AND BALANCE PURPOSES ONLY. SEE TEST AND BALANCE SCOPE ON M3.0

## PART PLAN – HVAC

SCALE: 1/8" = 1'-0"

## SERVICE AREA AIR BALANCE

| TAG | OUTSIDE AIR | EXHAUST |
|---|---|---|
| RTU-9 | 4000 (1) | |
| RTU-10 | 4000 (1) | |
| | | |
| EF-7 | | 300 |
| EF-8 | | 2000 |
| EF-9 | | 1800 |
| EF-10 | | 1500 |
| EF-12 | | 1500 |
| | | |
| | | |
| TOTAL | 8000 | 7100 |

(1) RTU-9 & 10 FAN ON CONTINUOUSLY DURING OCCUPIED

PER TABLE 403.3.1.1 2018 IMC MINIMUM DIRECT EXHAUST .75 CFM/SF REPAIR GARAGE

SERVICE NET AREA = 5450 SF
MIN EXH = (.75 CFM/SF)(5450 SF)
= 4088 CFM

SUM OF DIRECT EXHAUST FROM EF- 9, 10, 12 = 4800 CFM
SUM OF DIRECT & INDIRECT EXHAUST = 7,100 CFM

KEYED NOTES:

1. NEW THERMOSTAT FOR GAS UNIT HEATER LITESTAT TGH2-KR10 FIXED 68°F OCCUPIED/55°F SETBACK, NO OTHER IS ACCEPTABLE. REMOVE UNIT HEATER CONTROL FROM EMS AS 3RD STAGE HEAT FOR RTU
2. CARMON MONOXIDE EXHAUST FAN
3. THERMOSTAT FOR NEW ELECTRIC UNIT HEATER LITESTAT TGH2-KR10 FIXED 68°F OCCUPIED/55°F SETBACK, NO OTHER IS ACCEPTABLE. SINGLE THERMOSTAT TO CONTROL BOTH HEATERS. FURNISH 2 POLE RELAY IF REQUIRED.
4. EXISITNG GAS FIRED INFRARED TUBE HEATERS TO REMAIN
5. EXISITNG EXHAUST FAN TO REMAIN

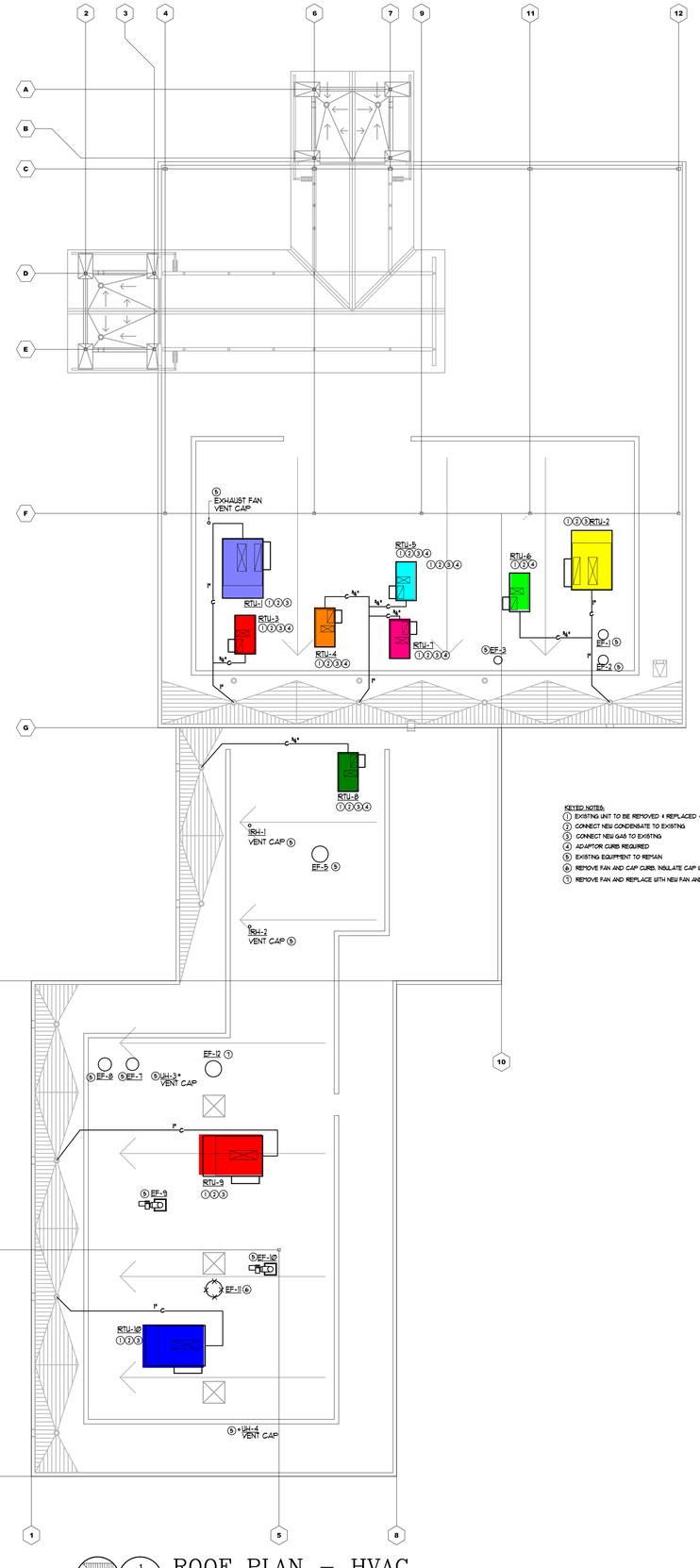


KEYED NOTES:

1. EXISTING UNIT TO BE REMOVED & REPLACED & EXISTING CURB TO REMAIN
2. CONNECT NEW CONDENSATE TO EXISTING
3. CONNECT NEW GAS TO EXISTING
4. ADAPTOR CURB REQUIRED
5. EXISTING EQUIPMENT TO REMAIN
6. REMOVE FAN AND CAP CURB. INSULATE CAP WITH 2" POLYSTYRENE
7. REMOVE FAN AND REPLACE WITH NEW FAN AND ADAPTER CURB

## ROOF PLAN – HVAC

SCALE: 3/32" = 1'-0"

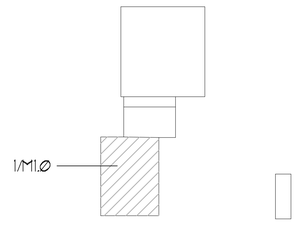


KEY PLAN

A.M. CERRA, JR. P.E.
1827 POWERS FERRY ROAD
BLDG # 18, SUITE # 100
ATLANTA, GEORGIA 30339
770-980-0581

22210.01

WISCONSIN A.M. CERRA, JR. E-32546 PROFESSIONAL ENGINEER

3/15/22

THIS DRAWING IS THE PROPERTY OF A.M. CERRA, JR. P.E., AND IS NOT TO BE REPRODUCED IN WHOLE OR IN PART, IS NOT TO BE USED ON ANY OTHER PROJECT AND SHALL BE RETURNED UPON REQUEST. COPYRIGHT AS DATED A.M. CERRA, JR. P.E. IS NOT VALID UNLESS SIGNATURE AND SEAL ARE PRESENT.

**RELEASED FOR CONSTRUCTION**

APPROVAL

CARMAX PE

REVISIONS

| REV. NO | DATE | DESCRIPTION |
|---|---|---|
| | | |

CARMAX THE AUTO SUPERSTORE

CARMAX, THE AUTO SUPERSTORE, INC.
12800 TOMAHAWK CREEK PKWY RICHMOND, VA 23238
(804) 747-0422

**STORE NO. 7179**
**11011 WEST METRO BOULEVARD**
**MILWAUKEE, WI 53224**

| | |
|---|---|
| PROJECT NO | 22210 .01 |
| DATE | 4 MAR 2022 |
| SHEET TITLE | PART PLAN & ROOF PLAN – HVAC |
| SHEET NO | M1.0 |

# HVAC GENERAL NOTES

1. ALL CONTROL WIRING SHALL BE PERFORMED IN ACCORDANCE WITH THE LATEST EDITION OF N.F.P.A. 70. ALL WIRING SHALL BE CONCEALED.
2. CONTRACTOR SHALL INSTALL ALL ROOF CURBS FOR ROOFTOP UNITS LEVEL TO HORIZON AT (4) CORNERS.
3. AIR TEST AND BALANCE REQUIRED BY INDEPENDENT T4B CONTRACTOR AABC OR NEBB CERTIFIED. SEE TEST AND BALANCE SCOPE ON THIS SHEET
4. EXISTING SMOKE DETECTORS TO REMAIN AND BE REUSED.
5. LENNOX START UP TECH SHALL PROGRAM THE PRODIGY BOARDS IN ALL NEW RTUS. PRODIGY BOARDS SHALL BE PROGRAMMED PRIOR TO CSUSA RECOMMISSIONING THE NOVAR SYSTEM.
6. CONTRACTOR SHALL PROVIDE CLEAN FILTERS IN ROOFTOP UNITS PRIOR TO AIR BALANCE AND AGAIN PRIOR TO OWNER ACCEPTANCE.
7. ALL WORK SHALL BE PERFORMED IN ACCORDANCE WITH THE 2015 INTERNATIONAL MECHANICAL AND FUEL GAS CODES WITH APPLICABLE STATE AMENDMENTS. ALL EQUIPMENT AND MATERIALS CAPABLE OF BEING U.L. LABELLED OR LISTED SHALL BEAR THE U.L. LABEL.
8. CONTRACTOR SHALL PROVIDE A GASKET BETWEEN BASE OF ROOF MOUNTED FANS AND ROOF CURBS TO PROVIDE AN AIRTIGHT JOINT.
9. PROVIDE MISCELLANEOUS STEEL AND/OR WOOD BLOCKING AND SUPPORT AT ROOF CURBS AND OPENINGS AS REQUIRED TO SUPPORT ROOF AND EQUIPMENT. SPECIFIC REQUIREMENTS SHALL BE VERIFIED WITH STRUCTURAL ENGINEER AND APPROVED EQUIPMENT DRAWINGS PRIOR TO PLACEMENT.
10. NEW SUPPLY AND EXHAUST DUCT SHALL BE 2.0 IN PRESSURE CLASS.
11. NEW DUCT SHALL HAVE PAINT GRIP FINISH AND BE EITHER GALVANNEALED OR MILL PHOSPHATIZED.
12. ANY NEW SUPPLY DUCT SHALL BE INTERNALLY INSULATED WITH 1" DUCT LINER EQUAL TO OWENS CORNING ACOUSTITEX, 1.5 LB DENSITY, R=3.8.

# PIPING GENERAL NOTES

1. ANY NEW GAS PIPING SHALL BE ASTM A-120, SCHEDULE 40, BLACK STEEL WITH 150 LB. MALLEABLE IRON SCREWED FITTINGS.
2. ANY NEW EXTERIOR GAS PIPE SHALL BE PAINTED WITH RUST PROHIBITIVE PAINT.

# HVAC LEGEND

| | |
|---|---|
| A.F.F. | ABOVE FINISHED FLOOR |
| VD | VOLUME DAMPER |
| B.O.S. | BOTTOM OF STEEL |
| B.O.D. | BOTTOM OF DUCT |
| U.N.O. | UNLESS NOTED OTHERWISE |
| VD | VOLUME DAMPER |
| | SUPPLY GRILLE WITH FLEX DUCT DROP |
| | RETURN/EXHAUST GRILLE |
| R D | R = RISE, D = DROP |
| T | THERMOSTAT |
| S | LENNOX ROOM TEMPERATURE/HUMIDITY SENSOR 72" AFF |
| | SPIN-IN FITTING |
| | EXISTING DUCT |
| | EXISTING DUCT TO BE REMOVED |
| OG | ORIGINAL GAS |
| AG | ADDITION GAS |
| EG | ESTIMATED EXISTING GAS |
| G | NEW GAS |

# ROOFTOP UNIT NOTES

1. CARMAX AUTO SUPERSTORE, LLC HAS A NATIONAL ACCOUNT WITH LENNOX INDUSTRIES, INC. FOR PRICING AND DELIVERY OF PACKAGED ROOFTOP UNITS IN ACCORDANCE WITH THE FOLLOWING. NO SUBSTITUTIONS WILL BE ALLOWED.

   A. ROOFTOP UNITS SHALL BE AS SCHEDULED.

   THE ELECTRICAL PACKAGE SHALL INCLUDE:
   - -UNIT DISCONNECT (INSTALLED AND WIRED)
   - -BOTTOM GAS/POWER ENTRY
   - -STANDARD LOW AMBIENT CONTROL
   - -DUAL 120V GFCI TYPE OUTLETS (TO BE FIELD WIRED)
   - -GLOBAL DRY BULB ECONOMIZERS W/FAN POWERED EXHAUST (1.5T AND LARGER UNLESS OTHERWISE NOTED)
   - -GLOBAL DRY BULB ECONOMIZERS W/BAROMETRIC RELIEF (6T AND SMALLER)
   - -STAINLESS STEEL HEAT EXCHANGER AND FRESH AIR TEMPERING FOR RTU-8+9

2. THE LENNOX NATIONAL ACCOUNT CONTACT IS:

   RON JOHNSON
   704-621-2606

3. HVAC EQUIPMENT PERFORMANCE CHECK (EPC)

   UPON COMPLETION OF THE HVAC INSTALLATION AND STARTUP, THE OWNER'S SERVICE CONSULTANT, AT THE OWNER'S EXPENSE, IS TO INSPECT THE JOB AND PERFORM AN (EPC). THIS EPC WILL AID THE CONTRACTOR IN CHECKING EACH MACHINE FOR PROPER OPERATION, CHECKING THE CONTROL PANEL AND ADJUSTING CONTROLS AS NECESSARY.

   THE OWNER'S SERVICE CONSULTANT:
   COMFORT SYSTEMS
   ATTN: VALERIE BEDEL
   P: 317-246-5181
   valerie.bedel@comfortsystemsusa.com

   ALL PROBLEMS DISCOVERED WITH THE EQUIPMENT OR ITS INSTALLATION (EXCLUDING NOVAR INSTALLATION) SHALL BE CORRECTED BY THE HVAC SUBCONTRACTOR IN ACCORDANCE WITH THE OWNER'S SERVICE CONSULTANT.

   AFTER ALL PROBLEMS HAVE BEEN CORRECTED, CARMAX AUTO SUPERSTORE, LLC SHALL VERIFY ALL EQUIPMENT IS OPERATING PROPERLY THROUGH THE NOVAR CONTROLLERS.

   PRIOR TO PERFORMANCE OF THE EPC, THE CONTRACTOR SHALL HAVE SET AND CONNECTED ALL COMPONENTS, COMPLETED THE POWER WIRING, CONNECTED ALL PIPING, REMOVED ALL SHIPPING BLOCKS, COMPLETED THE STARTUP OF ALL UNITS AND FURNISHED THE PRE-EPC CHECKLIST TO THE OWNER'S SERVICE CONSULTANT.

   THE EPC INCLUDES A FULL WRITTEN REPORT. COPIES WILL BE SENT TO THE GENERAL CONTRACTOR, AND CARMAX AUTO SUPERSTORE, LLC. COPIES OF THE EPC SHALL BE INCORPORATED IN TO THE O & M MANUALS BY THE GENERAL CONTRACTOR.

   A. RTU AIR FILTERS SHALL BE CAMFIL FARR AEROPLEAT III PLEATED, 2" THICK MERV 13, OR EQUAL. MARK FILTERS WITH INSTALLATION DATE

   B. THE PACKAGE COMPONENTS WILL BE CLEARLY LABELLED (IN LEGIBLE FORM) ON THE EXTERIOR OF ALL BOXES OR CRATES.

   C. SUBMIT RTU SUBMITTALS IN PDF FORMAT TO THE ENGINEER FOR APPROVAL.

CONTROLS SCOPE OF WORK:

EXISTING RTU'S ARE ON LOGIC ONE BUSS. SAVVY COMMUNICATIONS TO ICM ALL RTUS WITH ETM 205I5 I/O IS BY THE INTEGRATED ICM IN THE SAVVY.

1. ALL NEW RTU'S WILL BE BACNET.
2. THE GENERAL CONTRACTOR SHALL RETAIN COMFORT SYSTEMS USA (CSUSA) TO FURNISH AND INSTALL CONTROLS AS INDICATED BELOW. THE CONTACT AT CSUSA IS:
   VALERIE BEDEL 317-246-5181
3. PROVIDE PRE-CONSTRUCTION SCREEN SHOTS FROM NOVAR EMS MONITORING TO INCLUDE UNIT STATUS, MODULE COMMUNICATIONS STATUS AND ACTIVE ALARMS.
4. NOT USED
5. CONNECT NEW RTU'S W/PRODIGY BOARDS TO BACNET COMMUNICATION.
6. FOR NEW RTU'S REPLACE RTU NOVAR TEMPERATURE SENSORS WITH LENNOX SENSORS.
7. REPLACE/UPGRADE SAVVY 31 WITH OPUS XCM105 PANEL. SAME BASE PLATE, MINIMAL RE-WIRING REQUIRED.
8. CONNECT BACNET NETWORK AS REQUIRED.
9. TURN OVER SAVVY 31 PANEL AND ETM'S TO CARMAX FOR FUTURE SERVICE CALL INVENTORY SHIP TO COMFORT SYSTEMS USA, ATTN VALERIE BEDEL, CARMAX EMS ACCOUNT CO-ORDINATOR.
10. UPDATE SOFTWARE PER NEW CARMAX TEMPLATE
11. COMMISSION EMS SYSTEM
12. PROVIDE POST CONSTRUCTION SCREEN SHOTS FROM NOVAR EMS MONITORING TO INCLUDE UNIT STATUS, MODULE COMMUNICATIONS STATUS AND ACTIVE ALARMS.
13. LENNOX/CARMAX RTU SET UP SHEET IS TO BE COMPLETED UPON UNIT STARTUP. A COMPLETED SHEET IS TO BE LEFT IN EACH NEW RTU AND A COPY SUBMITTED WITH CLOSE OUT DOCUMENTATION FOR EACH NEW RTU.
14. FURNISH AND INSTALL ADDITIONAL CONTROL WIRE FOR CO2 SENSORS AND UNITS WITH HUMIDITROL.
15. ALL CONTROL, COMMUNICATIONS BUS AND SENSOR WIRING, NEW AND EXISTING, IS PART OF THE CONTROLS CONTRACTOR SCOPE OF WORK. REPLACE ANY DAMAGED WIRE.

# TEST & BALANCE SCOPE

| MARK | TOTAL AIR ACROSS COIL | OUTSIDE AIR | BYPASS AIR | SUPPLY AIR TO REGISTERS | OTHER |
|---|---|---|---|---|---|
| RTU-1 THRU 8 | AS SCHEDULED | AS SCHEDULED | -- | -- | |
| RTU-9 & 10 | 5600 | 4000 | 1600 | 4000 | REGISTER AIR QTY AS SHOWN ON LM10 |
| EF-12 | -- | -- | -- | -- | 1500 CFM EXHAUST AS ASCHEDULED |
| | | | | | |
| | | | | | |
| | | | | | |
| | | | | | |

SUGGESTED TEST & BALANCE PROCEDURE FOR BYPASS UNITS:

RTU- 9 & 10

1. CLOSE BYPASS DAMPER & MAKE AIR QTY 5600 CFM.
2. GRADUALLY OPEN BYPASS DAMPER UNTIL OUTSIDE AIR IS 4000 CFM. THIS MEANS 1600 CFM IS BEING BYPASSED IN THE CURB
3. OUTSIDE AIR SHOULD EQUAL SUPPLY AIR TO THE REGISTERS
4. TEST AND BALANCE CONTRACTOR TO NOTIFY COMFORT SYSTEMS AND INCLUDE IN T4B REPORT REGARDING MINIMUM POSITION OF OUTSIDE AIR DAMPER. SEE RTU NOTES FOR CONTACT INFO.

# ROOFTOP UNIT SCHEDULE

(SHOWN FOR REFERENCE ONLY)

| MARK | ZONE | EER | VOLT/PH | FAN DATA CFM | FAN DATA TSP IN WC | FAN DATA ESP IN WC | FAN DATA HP | (4) COOLING DATA EAT DB/WB | COOLING DATA TOTAL MBH | COOLING DATA SENSIBLE MBH | GAS DATA INPUT MBH | GAS DATA OUTPUT MBH | MIN. O/A CFM | MODEL | WEIGHT (3) | (1) REMARKS |
|---|---|---|---|---|---|---|---|---|---|---|---|---|---|---|---|---|
| RTU-1 | SHOWROOM | 11.8 | 480/3 | 5750 | .9 | .8 | 3.0 | 76.7/64.3 | 179.9 | 132.2 | 260 | 208 | | LENNOX LGC180H | 2900 | |
| RTU-2 | SHOWROOM | 11.8 | 480/3 | 5750 | .9 | .8 | 3.0 | 76.7/64.3 | 179.9 | 132.2 | 260 | 208 | | LENNOX LGC180H | 2900 | |
| RTU-3 | CUSTOMER WAITING | 11.3 | 480/3 | 1051 | .62 | .6 | 1.5 | 80.1/65.9 | 36.3 | 26.8 | 78 | 62.4 | | LENNOX LGA036H | 900 | |
| RTU-4 | BUSINESS | 11.2 | 480/3 | 1800 | .72 | .6 | 1.5 | 79.2/65.3 | 61.5 | 46.9 | 78 | 62.4 | | LENNOX LGA060H | 900 | |
| RTU-5 | BUYERS | 11.2 | 480/3 | 1200 | .63 | .6 | 1.5 | 79.5/65.9 | 37 | 28 | 78 | 62.4 | | LENNOX LGA036H | 900 | |
| RTU-6 | DATA/PBX | 11.2 | 480/3 | 960 | .63 | .6 | 1.5 | 76/67 | 34.3 | 28 | - | - | | LENNOX LCA036H | 900 | |
| RTU-7 | BREAK/CONF | 11.3 | 480/3 | 1500 | .69 | .6 | 1.5 | 78/65.9 | 48.8 | 34.3 | 78 | 62.4 | | LENNOX LGA048H | 900 | |
| RTU-8 | SERVICE WRITER | 11.2 | 480/3 | 1100 | .62 | .6 | 1.5 | 77.2/64.9 | 36 | 25.6 | 78 | 62.4 | | LENNOX LGA036H | 900 | |
| RTU-9 | SERVICE AREA | 11.0 | 480/3 | 5600 | 1.04 | .8 | 5.0 | 84/71.7 | 265 | 153.8 | 470 | 376 | | LENNOX LGA240H | 4900 | (2) |
| RTU-10 | SERVICE AREA | 11.0 | 480/3 | 5600 | 1.04 | .8 | 5.0 | 84/71.7 | 265 | 153.8 | 470 | 376 | | LENNOX LGA240H | 4900 | (2) |
| | | | | | | | | | | | | | | | | |
| | | | | | | | | | | | | | | | | |
| | | | | | | | | | | | | | | | | |
| | | | | | | | | | | | | | | | | |

(1) PROVIDE WITH FACTORY INSTALLED NOVAR CONTROL MODULE; LGA UNIT SERIES (MODEL 2051)

(2) RTU-9 & 10, BYPASS 850 CFM, 4750 CFM TO SERVICE

(3) INCLUDES WEIGH OF UNIT AND CURB

(4) 95°F CONDENSER AIR

# ROOFTOP UNIT SCHEDULE

| MARK | ZONE | EER (SEER) | VOLT/PH | FAN DATA CFM | FAN DATA TOT IN WC | FAN DATA ESP IN WC | FAN DATA HP | COOLING DATA (9) EAT DB/WB | COOLING DATA TOTAL MBH | COOLING DATA SENSIBLE MBH | GAS DATA INPUT MBH | GAS DATA OUTPUT MBH | MIN. O/A CFM | MODEL (1) | WEIGHT (11) | REMARKS (2)(4)(12) |
|---|---|---|---|---|---|---|---|---|---|---|---|---|---|---|---|---|
| RTU-1 | SHOWROOM | 12.0 | 480/3 | 5750 | 1.1 | .8 | 5.0 | 80/67 | -- | -- | 260 | 208 | 650 | LENNOX LGH180H4M | 2600 | (13)(14) |
| RTU-2 | SHOWROOM | 12.0 | 480/3 | 5750 | 1.1 | .8 | 5.0 | 80/67 | -- | -- | 260 | 208 | 650 | LENNOX LGH180H4M | 2600 | (13)(14) |
| RTU-3 | CUSTOMER WAITING | (17.0) | 480/3 | 1250 | .80 | .6 | 3.0 | 80/67 | -- | -- | 65 | 52 | 120 | LENNOX LGH036H4E | 1000 | (6)(11) |
| RTU-4 | BUSINESS | (17.0) | 480/3 | 1800 | .80 | .6 | 1.0 | 80/67 | -- | -- | 65 | 52 | 200 | LENNOX LGH060H4E | 1100 | (6)(11) |
| RTU-5 | BUYERS | (17.0) | 480/3 | 1200 | 1.1 | .6 | 3.0 | 80/67 | -- | -- | 65 | 52 | 160 | LENNOX LGH036H4E | 1000 | (6)(11) |
| RTU-6 | PBX | (17.0) | 480/3 | 975 | 1.0 | .8 | 3.0 | 75/63 | -- | -- | -- | -- | - | LENNOX LCH036H4M | 900 | (11) |
| RTU-7 | BREAK ROOM | (17.0) | 480/3 | 1500 | 1.2 | .6 | .75 | 80/67 | -- | -- | 65 | 52 | 300 | LENNOX LGH048H4E | 1000 | (6)(11) |
| RTU-8 | SERVICE WRITER | (17.0) | 480/3 | 1100 | .80 | .6 | 3.0 | 80/67 | -- | -- | 65 | 52 | 160 | LENNOX LGH036H4E | 1000 | (6)(11) |
| RTU-9 | SERVICE AREA (BIP) | 12.0 | 480/3 | 5600 | 1.20 | .8 | 5.0 | 80/70 | 243 | 139 | 480 | 384 | 4000 | LENNOX LGH240H4B | 3800 | (3)(7)(8)(10)(14)(15)(16)(5) |
| RTU-10 | SERVICE AREA (BIP) | 12.0 | 480/3 | 5600 | 1.20 | .8 | 5.0 | 80/70 | 243 | 139 | 480 | 384 | 4000 | LENNOX LGH240H4B | 3800 | (3)(7)(8)(10)(14)(15)(16)(5) |
| | | | | | | | | | | | | | | | | |
| | | | | | | | | | | | | | | | | |
| | | | | | | | | | | | | | | | | |

(1) ONLY ACCEPTABLE MANUFACTURER IS LENNOX. SEE "ROOFTOP UNIT NOTES"

(2) FIELD ADJUST SUPPLY FAN RPM, TO PROVIDE AIR QUANTITIES AS SCHEDULED ABOVE. INSTALL FIELD-SUPPLIED MOTOR AND/OR DRIVE AS REQ'D

(3) INSTALL FLAT DISCHARGE AIR TEMPERATURE SENSOR. SHIPPED LOOSE IN RTU CABINET, INSTALL SENSOR IN SUPPLY IN SUPPLY DUCT APPROX 3FT BELOW ROOF DECK. SEE DETAIL 4/M14.0

(4) BACNET CONTROL, NEW TEMP SENSOR OR COMBO TEMP/HUMIDITY SENSOR

(5) LEAVING AIR TEMPERATURE 51.5°F DB

(6) GLOBAL ECONOMIZER WITH BAROMETRIC RELIEF

(7) STAINLESS STEEL HEAT EXCHANGER

(8) FRESH AIR TEMPERING, 100% OUTSIDE AIR

(9) 95°F CONDENSER AIR

(10) MECHANICAL CONTRACTOR SHALL BE RESPONSIBLE FOR THE CONNECTION OF WIRING HARNESS SHIPPED LOOSE W/ RTU THAT ARE ASSOCIATED WITH OUTSIDE AIR DAMPER.

(11) ADAPTER CURB

(12) DRAIN PAN OVERFLOW SWITCH MODEL 216NSR30A1

(13) GLOBAL ECONOMIZER WITH POWERED EXHAUST

(14) 2 STAGE HEAT

(15) REUSE EXISTING BY-PASS CURB, NEW MIXING BOX

(16) 5600 CFM ACROSS COIL, 1600 CFM BYPASSED IN CURB, 4000 CFM OUTSIDE AIR AND SUPPLY TO SERVICE

(17) INCLUDES WEIGHT OF EXISTING CURB AND ADAPTER CURB WHERE APPPLICABLE

# ELECTRIC HEATER SCHEDULE

| MARK | LOCATIONS AND AREAS SERVED | CFM | KW | VOLT/PH | FAN TYPE | MANUFACTURER/MODEL | MOUNTED | REMARKS |
|---|---|---|---|---|---|---|---|---|
| EUH-1 | PRESENTATION | 950 | 15 | 480/3 | DOWNFLOW UNIT HEATER | QMARK MUH-154 | (1) | (2)(3)(4)(5) |
| EUH-2 | PRESENTATION | 950 | 15 | 480/3 | DOWNFLOW UNIT HEATER | QMARK MUH-154 | (1) | (2)(3)(4)(5) |
| | | | | | | | | |
| | | | | | | | | |

(1) PROVIDE WITH VERTICAL DOWN DISCHARGE MOUNTING BRACKET FOR SUSPENSION FROM STRUCTURE FACE OF HEATER SHALL BE EVEN WITH BOTTOM OF BAR JOISTS.

(2) PROVIDE LITESTAT TGH2-KRO HEAT ONLY, 24V PROGRAMMABLE, NON-ADJUSTABLE. ONE THERMOSTAT T CONTROL BOTH HEATERS. FURNISH 2 POLE RELAY IF REQUIRED NO OTHER THERMOSTAT IS ACCEPTABLE.

(3) PROVIDE WITH DISCONNECT SWITCH

(4) HALF BLADES VERTICAL DOWN DISCHARGE HALF AT 45° DEGREE ACROSS THE ROOM

(5) FACTORY WIRED FOR LOW VOLTAGE CONTROL

# FAN SCHEDULE

| MARK | LOCATIONS AND AREAS SERVED | CFM | ESP IN. WC | MAX FAN RPM | FAN TYPE | DAMPER | VOLT/PH | HP (WATTS) | MANUFACTURER / MODEL | SC | REMARKS |
|---|---|---|---|---|---|---|---|---|---|---|---|
| EF-12 | SERVICE | 1500 | .375 | 1725 | ROOF CENT | BACKDRAFT | 120/1 | 1/2 | GREENHECK CUE-121-A | SC | (1)(2)(3)(4)(5)(6) |
| | | | | | | | | | | | |
| | | | | | | | | | | | |

(1) ROOF CURB CAP SHALL NOT OVERLAP CURB MORE THEN 1/2" ON ALL SIDES. ATTACH CURB CAP TO CURB ON ALL SIDES. MIN. 2 SCREWS PER SIDE.

(2) PROVIDE ADAPTER CURB, GASKET BETWEEN CURB AND FAN

(3) PROVIDE WITH DISCONNECTS

(4) PROVIDE FANS MARKED "SC" ABOVE WITH SOLID STATE SPEED CONTROLLERS

(5) PREVIOUS FAN MOTOR 3/4 HP @ 120V

(6) FAN TO BE CONTROLLED FROM EMS, ON OCCUPIED/OFF SETBACK


A.M. CERRA, JR. P.E.
1827 POWERS FERRY ROAD
BLDG # 18, SUITE # 100
ATLANTA, GEORGIA 30339
770-980-0581


22210.01

WISCONSIN A.M. CERRA, JR. E-22546 PROFESSIONAL ENGINEER

3/15/22


THIS DRAWING IS THE PROPERTY OF A.M. CERRA JR. P.E., AND IS NOT TO BE REPRODUCED IN WHOLE OR IN PART, IS NOT TO BE USED ON ANY OTHER PROJECT AND SHALL BE RETURNED UPON REQUEST. COPYRIGHT AS DATED A.M. CERRA JR. P.E. IS NOT VALID UNLESS SIGNATURE AND SEAL ARE PRESENT.


**RELEASED FOR CONSTRUCTION**

APPROVAL

CARMAX PE

REVISIONS

| REV. NO | DATE | DESCRIPTION |
|---|---|---|
| | | |

CARMAX THE AUTO SUPERSTORE

CARMAX, THE AUTO SUPERSTORE, INC.
6830 CONGRESS CREEK PKWY RICHMOND, VA 23238
(804) 747-0422

**STORE NO. 7179**
**11011 WEST METRO BOULEVARD**
**MILWAUKEE, WI 53224**

| | |
|---|---|
| PROJECT NO | 22210.01 |
| DATE | 4 MAR 2022 |
| SHEET TITLE | SCHEDULES – HVAC |
| SHEET NO | M3.0 |

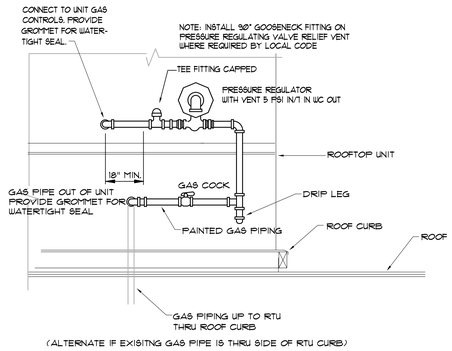


3 / M4.0 RTU GAS CONNECTION DETAIL

NOT TO SCALE

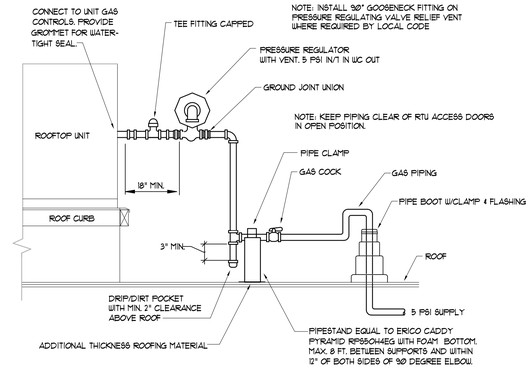


1 / M4.0 RTU GAS CONNECTION DETAIL

NOT TO SCALE

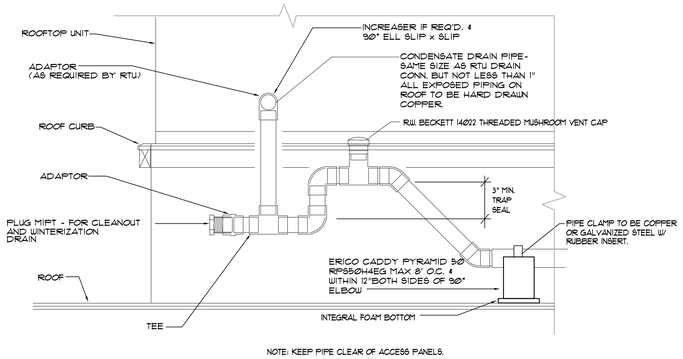


NOTE: KEEP PIPE CLEAR OF ACCESS PANELS.

2 / M4.0 RTU CONDENSATE DRAIN DETAIL

NOT TO SCALE

A.M. CERRA, JR. P.E.
1827 POWERS FERRY ROAD
BLDG # 18, SUITE # 100
ATLANTA, GEORGIA 30339
770-980-0581

22210.01

WISCONSIN A.M. CERRA, JR. E-22546 PROFESSIONAL ENGINEER

3/15/22

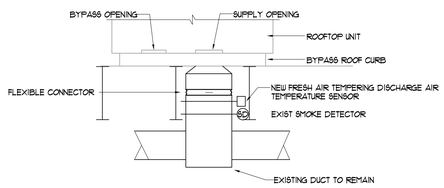


RTU-9 & 10

4 / M4.0 RTU DUCT DROP DETAIL

NOT TO SCALE

THIS DRAWING IS THE PROPERTY OF A.M. CERRA JR. P.E., AND IS NOT TO BE REPRODUCED IN WHOLE OR IN PART, IS NOT TO BE USED ON ANY OTHER PROJECT AND SHALL BE RETURNED UPON REQUEST. COPYRIGHT AS DATED A.M. CERRA JR. P.E. IS NOT VALID UNLESS SIGNATURE AND SEAL ARE PRESENT.

RUSKIN ROOFTOP SYSTEMS

**SPECIFICATION DATA FOR LENNOX LGA / LCA 156 - 360 LHA 180-240**

**RRS MODEL#: 50-307-3* BYPASS MIXING BOX**

Features
1. Heavy gauge construction.
2. Color coordinated with the unit.
3. Fully insulated with 1" fiberglass insulation 1.5 lb. density.
4. Access doors on both sides.
5. Factory wired and tested.
6. Low leak gasketed dampers.
7. **Mixing Box must be sealed weather tight to RTU in field during installation.**

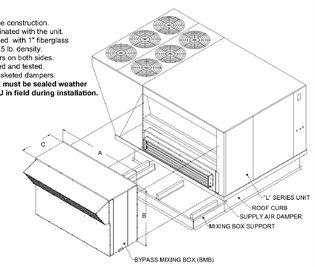


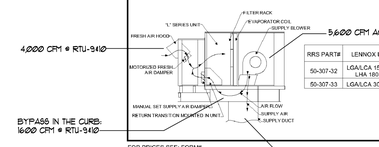


| RRS PART# | LENNOX UNIT# | A | B | C | NET WEIGHT |
|---|---|---|---|---|---|
| 50-307-32 | LGA/LCA 156-360/LHA 180-240 | 69 ¼ | 50 | 30 ¼ | 550 |
| 50-307-33 | LGA/LCA 300H-360 | 81 ¼ | 53 ¼ | 30 | 600 |

FOR PRICES SEE: FORM# MAY 10, 2010 FORM# LXMB32 SUPERCEDES 05-02-06

RUSKIN ROOFTOP SYSTEMS 1625 Diplomat Drive, Carrollton, Texas 75006-6848 Phone (972) 247-7447 (800) 552-4822 Fax (972) 243-0940

6 / M4.0 MIXING BOX DETAIL

NOT TO SCALE

RSI ROOFTOP SYSTEMS, INC.

**SPECIFICATION DATA FOR CARMAX LGA / LCA 156 - 360 LHA 180-240**

**RSI MODEL: 50-275-32 ROOF CURB W/ BYPASS MIXING BOX SUPPORT**

Features:
1. Roof curb is built to NRCA standards.
2. Roof curb is constructed of 16 gauge G90 steel.
3. Curb and mixing box support ships completely welded in one piece.
4. Full perimeter 2 x 4 wood nailer.
5. Supply plenum completely insulated and assembled.
6. Net weight of curb is 650 lbs.

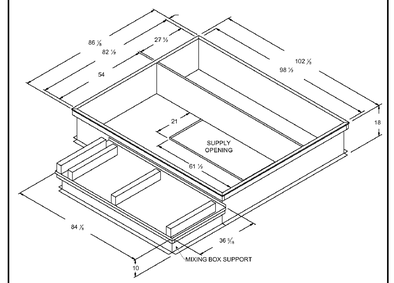


NOTE: BYPASS CURBS ARE EXISTING TO REMAIN. SHOWN FOR GENERAL INFORMATION ONLY

FOR PRICES SEE: FORM# LX-CM-LP01 SEPTEMBER 27, 2006 FORM# LXCMHCRB32 SUPERCEDES 12-04-02

RSI ROOFTOP SYSTEMS, INC. 2405 McIver Lane, Carrollton, Texas 75006-5510 Phone (972) 247-7447 (800) 552-4822 Fax (972) 243-0940

5 / M4.0 BYPASS CURB DETAIL

NOT TO SCALE

**RELEASED FOR CONSTRUCTION**

APPROVAL

CARMAX PE

REVISIONS

| REV. NO | DATE | DESCRIPTION |
|---|---|---|
| | | |

CARMAX THE AUTO SUPERSTORE

CARMAX, THE AUTO SUPERSTORE, INC.
4900 COX ROAD, SUITE 200
GLEN ALLEN, VIRGINIA 23060
(804) 747-0422

**STORE NO. 7179**
**11011 WEST METRO BOULEVARD**
**MILWAUKEE, WI 53224**

| | |
|---|---|
| PROJECT NO | 22210 .01 |
| DATE | 4 MAR 2022 |
| SHEET TITLE | DETAILS – HVAC |
| SHEET NO | M4.0 |