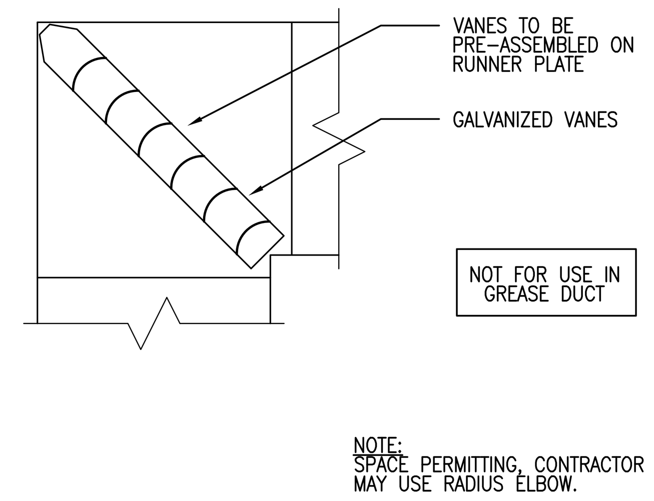


1 SQUARE ELBOW WITH TURNING VANES
N.T.S.

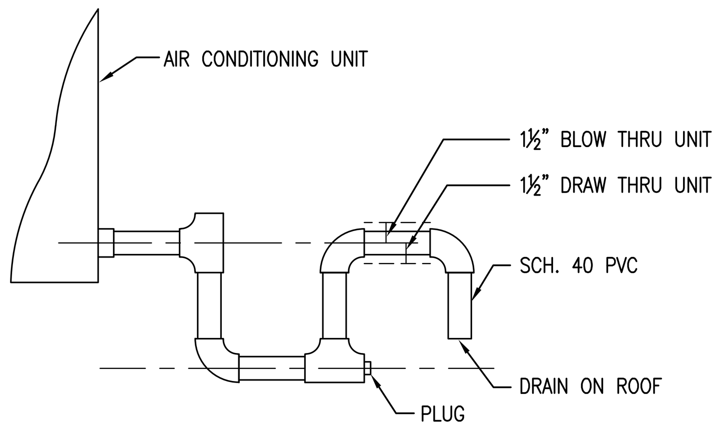


2 CONDENSATE TRAP
N.T.S.

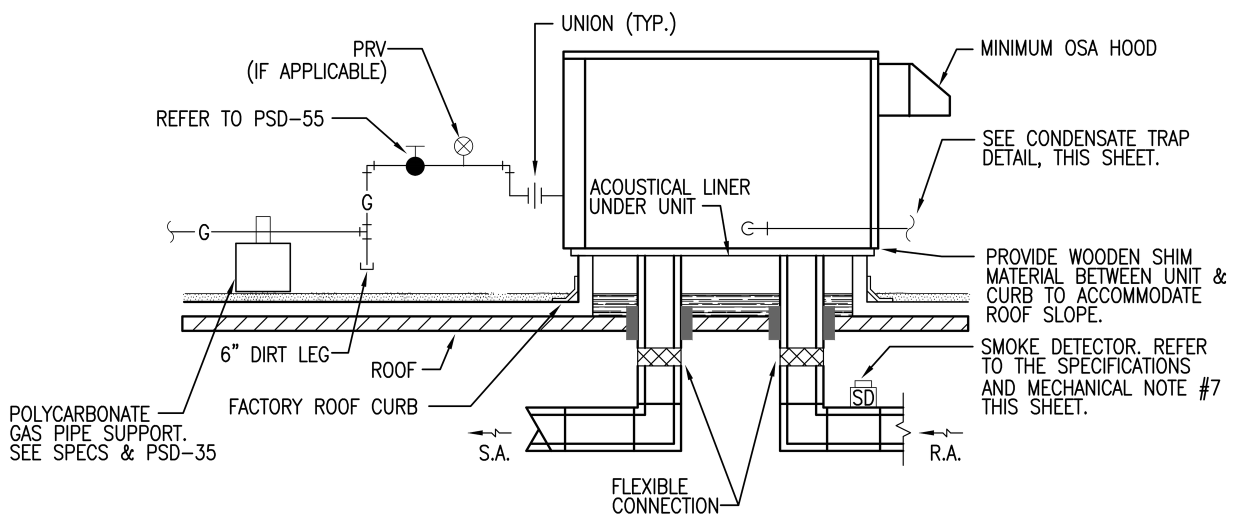


3 ROOF TOP UNIT DETAIL
N.T.S

## MECHANICAL NOTES

1. ALL MECHANICAL EQUIPMENT SHALL BE INSTALLED IN ACCORDANCE WITH MANUFACTURER'S RECOMMENDATIONS AND LOCAL CODES.
2. ALL DUCTWORK SHALL BE GALVANIZED SHEET METAL AND SHALL BE FABRICATED AND INSTALLED IN ACCORDANCE WITH SMACNA LOW PRESSURE DUCT CONSTRUCTION STANDARDS. DUCT HANGERS AND SUPPORTS SHALL BE IN ACCORDANCE WITH SMACNA RECOMMENDATIONS.
3. ALL DUCTWORK DIMENSIONS ARE ACTUAL SHEET METAL DIMENSIONS. ALL DUCTWORK ENCLOSED BY CEILING OR WALL SHALL BE INSULATED. EXPOSED DUCTWORK DOES NOT REQUIRE INSULATION.
4. IT SHALL BE THE RESPONSIBILITY OF THE CONTRACTOR TO OBTAIN ALL REQUIRED PERMITS AND PAY ALL FEES REQUIRED FOR THIS WORK.
5. PROVIDE CONDENSATE DRAINS FOR ALL EQUIPMENT REQUIRING THEM. ALL CONDENSATE DRAINAGE PIPING SHALL BE SCHEDULE 40 PVC WITH SOCKET JOINTS USING SOLVENT CEMENT. PIPING SHALL RUN FULL SIZE OF THE CONNECTION AND SHALL HAVE AN ADEQUATE AIR SEAL TRAP AT EACH UNIT CONNECTION WITH A VENT UPSTREAM OF THE TRAP.
6. THE MECHANICAL DRAWINGS ARE DIAGRAMMATIC AND SHOW THE RELATIONSHIP BETWEEN EQUIPMENT AND CONNECTIONS. DO NOT SCALE THE DRAWINGS FOR EXACT SIZE OR LOCATIONS. BUILDING DIMENSIONS SHALL BE TAKEN FROM THE ARCHITECTURAL PLANS AND EQUIPMENT DIMENSIONS SHALL BE TAKEN FROM CERTIFIED EQUIPMENT DATA.
7. IN AIR SYSTEMS GREATER THAN 2,000 CFM THAT SERVE MULTIPLE ENCLOSED SPACES, SMOKE DETECTORS SHALL BE LOCATED IN THE RETURN AIR STREAM AHEAD OF THE AIR FILTERS AND DOWNSTREAM OF ANY BRANCH CONNECTIONS PRIOR TO FRESH AIR INTAKE. SMOKE DETECTORS SHALL AUTOMATICALLY SHUTDOWN THE RTU WHEN SMOKE IS DETECTED IN THE DUCT.
8. ALL FANS OF 2,000 CFM OR MORE SHALL HAVE MEANS OF AUTOMATIC SHUTDOWN.
9. COORDINATE THE LOCATION OF ALL PENETRATIONS OF THE STRUCTURE WITH ARCHITECTURAL AND STRUCTURAL DRAWINGS.
10. EXACT LOCATIONS OF ALL CEILING DIFFUSERS TO BE COORDINATED WITH LIGHTING LAYOUT AND REFLECTED CEILING PLAN.
11. ALL FANS ⅛ HP AND ABOVE SHALL HAVE NON-FUSED DISCONNECT SWITCH MOUNTED AT THE FAN. MAY BE EQUIPPED WITH NON-FUSED DISCONNECT SWITCH IF APPROVED BY LOCAL AUTHORITIES.
12. ALL RTUS TO BE CONTROLLED BY AN OWNER PROVIDED ENERGY MANAGEMENT SYSTEM.
13. MOUNT THERMOSTATS AT 48" AFF UNLESS OTHERWISE NOTED. THERMOSTATS LOCATED ON AN OUTSIDE WALL SHALL BE MOUNTED ON AN INSULATED BASE.
15. ALL PIPE DROPS IN SALES AREA FROM ROOF TO LOW WALLS OR EQUIPMENT SHOULD BE COORDINATED AND GROUPED TOGETHER WITH OTHER MECHANICAL PIPES.
16. COORDINATE ACTIVATION/CONTROL OF EQUIPMENT/SYSTEMS WITH PHASING PLAN. PROVIDE TEMPORARY CONTROLS AS REQUIRED FOR COMPLETED PHASES TO BE FUNCTIONAL FOR STORE OPERATIONS.
17. PROVIDE DUCT LINER FOR SOUND ATTENUATION FOR FIRST 10' OF SUPPLY & RETURN DUCT RUNS AT HVAC UNITS.
18. PRIOR TO PERFORMING ANY WORK ON THE GAS SYSTEM, CONTRACTOR SHALL VERIFY WITH THE NATURAL GAS PROVIDER THE COMPATIBILITY OF THE EXISTING GAS REGULATOR/METER WITH THE GAS LOADS AND PRESSURES SHOWN ON DRAWINGS. CONTRACTOR SHALL REPORT ANY INCONSISTENCIES OR DISCREPANCIES TO THE PROJECT MANAGER AND ARCHITECT.

NOTES TO GENERAL CONTRACTOR REGARDING OWNER SUPPLIED, CONTRACTOR INSTALLED EQUIPMENT:

1. CONTRACTOR TO OBTAIN APPROVAL OF ANY DELIVERY DATE CHANGES FROM OWNER PROJECT MANAGER AND COORDINATE WITH VENDOR.
2. CONTRACTOR TO RECEIVE EQUIPMENT, PROVIDE INSPECTION, AND NOTIFY VENDOR & OWNER PROJECT MANAGER OF MISSING AND/OR DAMAGED MATERIALS WITHIN 48 HOURS AFTER DELIVERY (20 DAYS FOR CONCEALED DAMAGE).
3. CONTRACTOR TO PROVIDE SAFE HARBORING, INSTALLATION, AND REMOVAL OF ANY SALVAGE MATERIALS.
4. CONTRACTOR TO HANDLE ANY WARRANTY CLAIMS (PRIOR TO STORE OPENING) DIRECTLY WITH VENDOR.

CONTRACTOR TO COORDINATE VOLTAGE AND PHASE OF EACH PIECE OF EQUIPMENT WITH ELECTRICAL CONTRACTOR BEFORE ORDERING EQUIPMENT.

## ABBREVIATIONS

| | |
|---|---|
| AFF | ABOVE FINISHED FLOOR |
| AHU | AIR HANDLING UNIT |
| BOD | BOTTOM OF DUCT |
| CFM | CUBIC FEET PER MINUTE |
| COMP. | COMPRESSOR |
| CONN. | CONNECTION |
| CU | CONDENSING UNIT |
| DB | DRY BULB |
| DIA | DIAMETER |
| DN | DOWN |
| E | EXISTING |
| EAT | ENTERING AIR TEMPERATURE |
| EBH | ELECTRIC BASEBOARD HEATER |
| EDH | ELECTRIC DUCT HEATER |
| EF | EXHAUST FAN |
| EFF | EFFICIENCY |
| EH | ELECTRIC HEATER |
| ENT | ENTERING |
| EUH | ELECTRIC UNIT HEATER |
| EWT | ENTERING WATER TEMPERATURE |
| FCU | FAN COIL UNIT |
| FSD | FIRE SMOKE DAMPER |
| FT | FEET |
| GPM | GALLONS PER MINUTE |
| HP | HORSEPOWER |
| IN | INCH |
| LAT | LEAVING AIR TEMPERATURE |
| LVG | LEAVING |
| MAU | MAKE-UP AIR UNIT |
| MAX | MAXIMUM |
| MIN | MINIMUM |
| MOT | MOTORIZED |
| MSS | MINI SPLIT SYSTEM |
| NC | NOISE CRITERION |
| NO. | NUMBER |
| NOM | NOMINAL |
| OPER | OPERATING |
| OSA | OUTSIDE AIR |
| ΔP | PRESSURE DIFFERENTIAL |
| PD | PRESSURE DROP |
| PRV | PRESSURE REDUCING VALVE |
| RA(R) | RETURN AIR (REGISTER) |
| REQ'D | REQUIRED |
| RPM | REVOLUTIONS PER MINUTE |
| RTU | ROOFTOP UNIT |
| SAD | SUPPLY AIR DIFFUSER |
| SA(R) | SUPPLY AIR (REGISTER) |
| SP | STATIC PRESSURE |
| TEMP | TEMPERATURE |
| TOD | TOP OF DUCT |
| T'STAT | THERMOSTAT |
| (TYP) | TYPICAL |
| VEL | VELOCITY |
| VOL | VOLUME |
| WB | WET BULB |
| VAV | VARIABLE AIR VOLUME |

## LEGEND

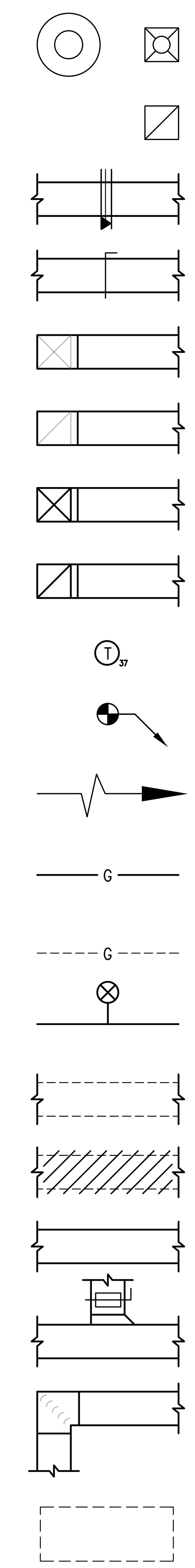


SUPPLY AIR DIFFUSER
RETURN/EXHAUST AIR REGISTER
FIRE DAMPER IN DUCT AT WALL
BALANCING DAMPER IN DUCT
SUPPLY DUCT TURNING DOWN
RETURN/EXHAUST TURNING DOWN
SUPPLY DUCT TURNING UP
RETURN/EXHAUST TURNING UP
THERMOSTAT TO EQUIPMENT NUMBER
CONNECT TO EXISTING
AIR FLOW DIRECTION
GAS PIPE IN PROJECT
EXISTING GAS PIPE
GAS PRESSURE REGULATOR
EXISTING DUCT TO REMAIN
EXISTING DUCT TO BE REMOVED
WORK IN PROJECT
STANDARD BRANCH CONNECTION WITH AIR VOLUME DAMPER
90° ELBOW WITH TURNING VANES
EXISTING EQUIPMENT ON ROOF

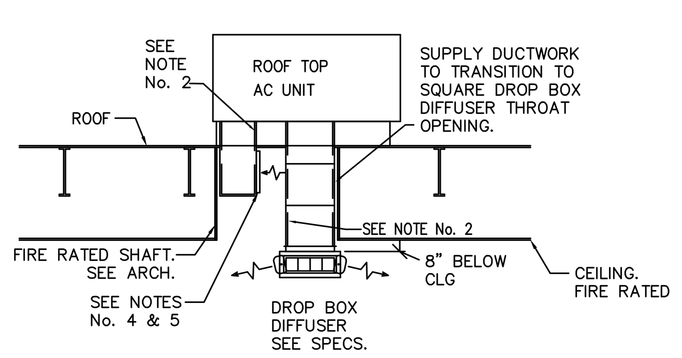


ELEVATION – LOCAL RETURN AIR

NOTE:
1. EACH DIFFUSER LOUVER ANGLE OF DEFLECTION MUST BE ADJUSTED SO THE SUPPLY AIR DOES NOT CAUSE LIGHT FIXTURE & DECOR TRELLIS MOVEMENT OR EXCEED A VELOCITY OF 50 FPM AT THE FACE OF ANY REFRIGERATED DISPLAY CASE, INCLUDING ISLAND CASES. OTHERWISE, ADJUST LOUVERS DOWNWARDS TO DISTRIBUTE AIR INTO THE SALES AREA, TAKING CARE NOT TO DISCOMFORT CUSTOMERS.
2. PROVIDE SUPPLY & RETURN AIR DUCTWORK WITH LINER, SEE SPECIFICATIONS.
3. PROVIDE TURNING VANES IN ALL RECTANGULAR 90 DEGREE DUCT MITERED ELBOWS.
4. RETURN AIR GRILLE IN SIDE OF DUCT DROP TO BE TITUS 50F w/1" OPENINGS OR EQUAL. SIZE GRILLE SIMILAR IN LENGTH AND APPROX. 1.5x WIDTH OF RTU RETURN AIR OPENING (EX. 28"x10" RETURN AIR OPENING = 28"X16" RETURN AIR GRILLE. ROUND UP TO STANDARD SIZE.)
5. RETURN AIR GRILLE TO BE MOUNTED FACING THE SUPPLY DUCT DROP. MINIMIZE DISTANCE OF RETURN AIR DROP BELOW ROOF DECK.

| | | |
|---|---|---|
| DROP BOX DIFFUSER | SCALE: NONE | |
| EDITED | HSD-1 | |

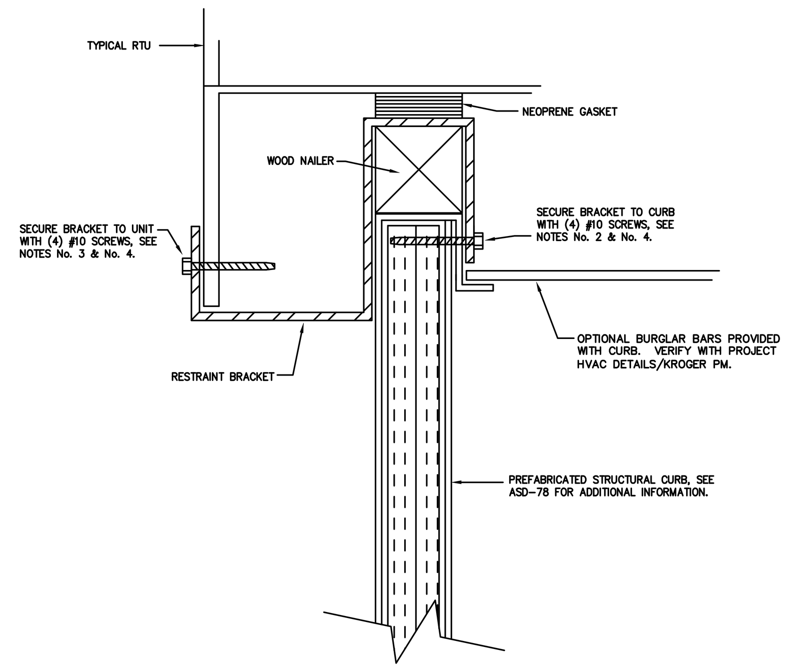


NOTES:
1. WIND/SEISMIC BRACKETS, PREFRABRICATED STRUCTUAL CURB & RTU ARE SUPPLIED WITH CURBS AND CONTRACTOR INSTALLED.
2. ATTACH BRACKET TO INSIDE TOP OF CURB USING TEK SCREWS SUPPLIED AS SHOWN -- ATTACH MOUNTING BRACKET TO CURB BEFORE MOUNTING UNIT ON CURB.
3. AFTER SETTING UNIT ON CURB, ATTACH BOTTOM OF BRACKET TO BASE RAIL ON UNIT WITH TEK SCREWS SUPPLIED AS SHOWN.
4. BRACKETS AND ATTACHMENT SCREWS ARE PROVIDED WITH EACH CURB AND INCLUDE: (6) 14 GA. STEEL ATTACHMENT BRACKETS. #10 – 1 1/2" LONG TEK SCREWS. PROVIDE AMPLE NUMBER OF SCREWS. THREE BRACKETS ON EACH LONG SIDES OF CURB EQUALLY SPACED.
5. (8) BRACKETS ON 'D' CABINET ONLY.

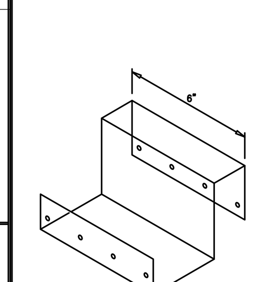


Bracket Isometric

ORIGINAL ISSUE DATE 10/1/09

| | | |
|---|---|---|
| RTU WIND-SEISMIC RESTRAINT BRACKET | DATE: 11/15/17 SCALE: NONE DRAWN: ZAW | |
| MASTER SPECIFICATION DETAIL | HSD-10 | |

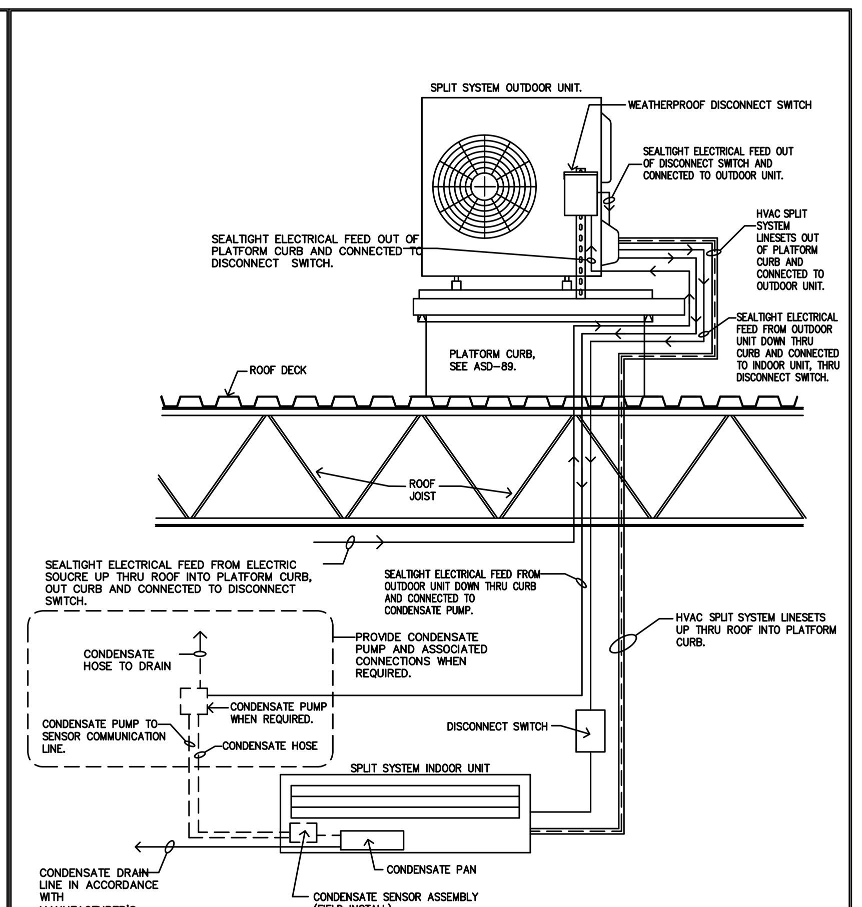


Notes:
1. REFER TO ASD-89 FOR PLATFORM CURB INSTALLATION AND ADDITIONAL INFORMATION.
2. SPLIT SYSTEM'S MANUFACTURERS AND MODELS VARY, REFERENCE MANUFACTURER'S INSTALLATION GUIDE FOR ADDITIONAL INFORMATION.

| | | |
|---|---|---|
| HVAC SPLIT SYSTEM DIAGRAM | DATE: 10/11/12 SCALE: NONE DRAWN: ZAW | |
| MASTER SPECIFICATION DETAIL | HSD-11 | |

KROGER
STORE #387
240 NEW BYHALIA RD
COLLIERVILLE, TENNESSEE
38017
A DEVELOPMENT OF:
THE KROGER COMPANY

Naos Design Group, LLC
4949 SOUTH SYRACUSE ST.
SUITE 460
DENVER, COLORADO 80237
(p) 303.759.5777
(f) 720.360.4281
www.naosdg.com
ARCHITECT OF RECORD
MARC BREETZ

DESIGN FABRICATIONS
1100 EAST MANDOLINE AVE.
SUITE 100
MADISON HEIGHTS, MI 48071
T 800.968.9440
F 248.597.0989 designers@dfabdesign.com
INTERIOR DECOR

Pickering Firm, Inc.
Architecture · Engineering
Planning · Surveying
6363 Poplar Avenue, Suite 300
Memphis, TN 38119
901.726.0810
STRUCTURAL

Pickering Firm, Inc.
Architecture · Engineering
Planning · Surveying
6363 Poplar Avenue, Suite 300
Memphis, TN 38119
901.726.0810
PLUMBING, MECHANICAL, ELECTRICAL,

Pickering Firm, Inc.
Architecture · Engineering
Planning · Surveying
6363 Poplar Avenue, Suite 300
Memphis, TN 38119
901.726.0810
CIVIL

ISSUE LOG

| NO. | REV. | DESCRIPTION | DATE |
|---|---|---|---|
| 1 | - | PERMIT SET | 10/11/2021 |

| JOB: | SCALE: |
|---|---|
| 2021169 | AS SHOWN |

SHEET NO.
M0.1
MECHANICAL SYMBOLS AND GENERAL NOTES

COPYRIGHT © 2021 NAOS DESIGN GROUP, LLC. THESE DRAWINGS, OR PARTS THEREOF, MAY NOT BE REPRODUCED IN ANY FORM, BY ANY METHOD, FOR ANY PURPOSE, WITHOUT PRIOR WRITTEN CONSENT FROM NAOS

October 11, 2021 12:01pm/jhamilton
F:\26236.00\CAD- V-387\Sheets\M0.1 MECHANICAL SYMBOLS AND GENERAL NOTES.dwg

## GENERAL HVAC NOTES

1. PROVIDE BALANCING DAMPERS AT POINTS ON SUPPLY, RETURN, AND EXHAUST SYSTEMS WHERE BRANCHES LEAD FROM LARGE DUCTS AS REQUIRED FOR AIR BALANCING. INSTALL AT A MINIMUM OF TWO DUCT WIDTHS FROM BRANCH TAKEOFF.
2. SEE AIR DISTRIBUTION SCHEDULE FOR DUCT RUNOUT SIZES TO SUPPLY DEVICES.
3. PROVIDE TURNING VANES IN SQUARE ELBOWS AS SHOWN IN DETAIL 1/M0.1. DO NOT PUT TURNING VANES IN EXHAUST GREASE DUCT.
4. PROVIDE DUCT LINER IN RECTANGULAR SUPPLY AND RETURN DUCTS IN SPACES WITHOUT A CEILING FOR A DISTANCE OF 10 FEET FROM FIRST ELBOW BELOW THE ROOF.
5. PROVIDE DUCTWRAP WITH A MINIMUM VALUE OF R-6. (TYPICAL OF ALL DUCTWORK ABOVE CEILINGS IN THIS PROJECT)

01 HVAC PLAN & DETAILS

SCALE: 3/32" = 1'-0"

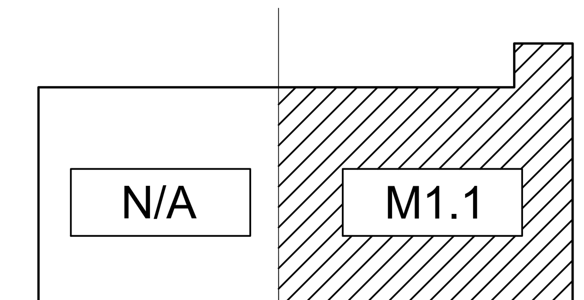


KEY PLAN

SCALE: NOT TO SCALE

October 11, 2021 12:01pm/jhamilton
F:\26236.00\CAD-V-387\Sheets\M1.1 HVAC PLAN & DETAILS.dwg

Kroger FRESH FOR EVERYONE

KROGER STORE #387
240 NEW BYHALIA RD
COLLIERVILLE, TENNESSEE 38017
A DEVELOPMENT OF: THE KROGER COMPANY


naos Naos Design Group, LLC
4949 SOUTH SYRACUSE ST. SUITE 460
DENVER, COLORADO 80237
(p) 303.759.5777
(f) 720.360.4281
www.naosdg.com
ARCHITECT OF RECORD MARC BREETZ

d|fab DESIGN FABRICATIONS
INTERIOR DECOR

Pickering Firm, Inc. Architecture · Engineering Planning · Surveying
6363 Poplar Avenue, Suite 300 Memphis, TN 38119 901.726.0810
STRUCTURAL

Pickering Firm, Inc. Architecture · Engineering Planning · Surveying
6363 Poplar Avenue, Suite 300 Memphis, TN 38119 901.726.0810
PLUMBING, MECHANICAL, ELECTRICAL,

Pickering Firm, Inc. Architecture · Engineering Planning · Surveying
6363 Poplar Avenue, Suite 300 Memphis, TN 38119 901.726.0810
CIVIL


ISSUE LOG

| NO. | REV. | DESCRIPTION | DATE |
| --- | --- | --- | --- |
| 1 | - | PERMIT SET | 10/11/2021 |

| JOB: | SCALE: |
| --- | --- |
| 2021169 | AS SHOWN |

SHEET NO.

# M1.1

HVAC PLAN & DETAILS

COPYRIGHT © 2021 NAOS DESIGN GROUP, LLC. THESE DRAWINGS, OR PARTS THEREOF, MAY NOT BE REPRODUCED IN ANY FORM, BY ANY METHOD, FOR ANY PURPOSE, WITHOUT PRIOR WRITTEN CONSENT FROM NAOS

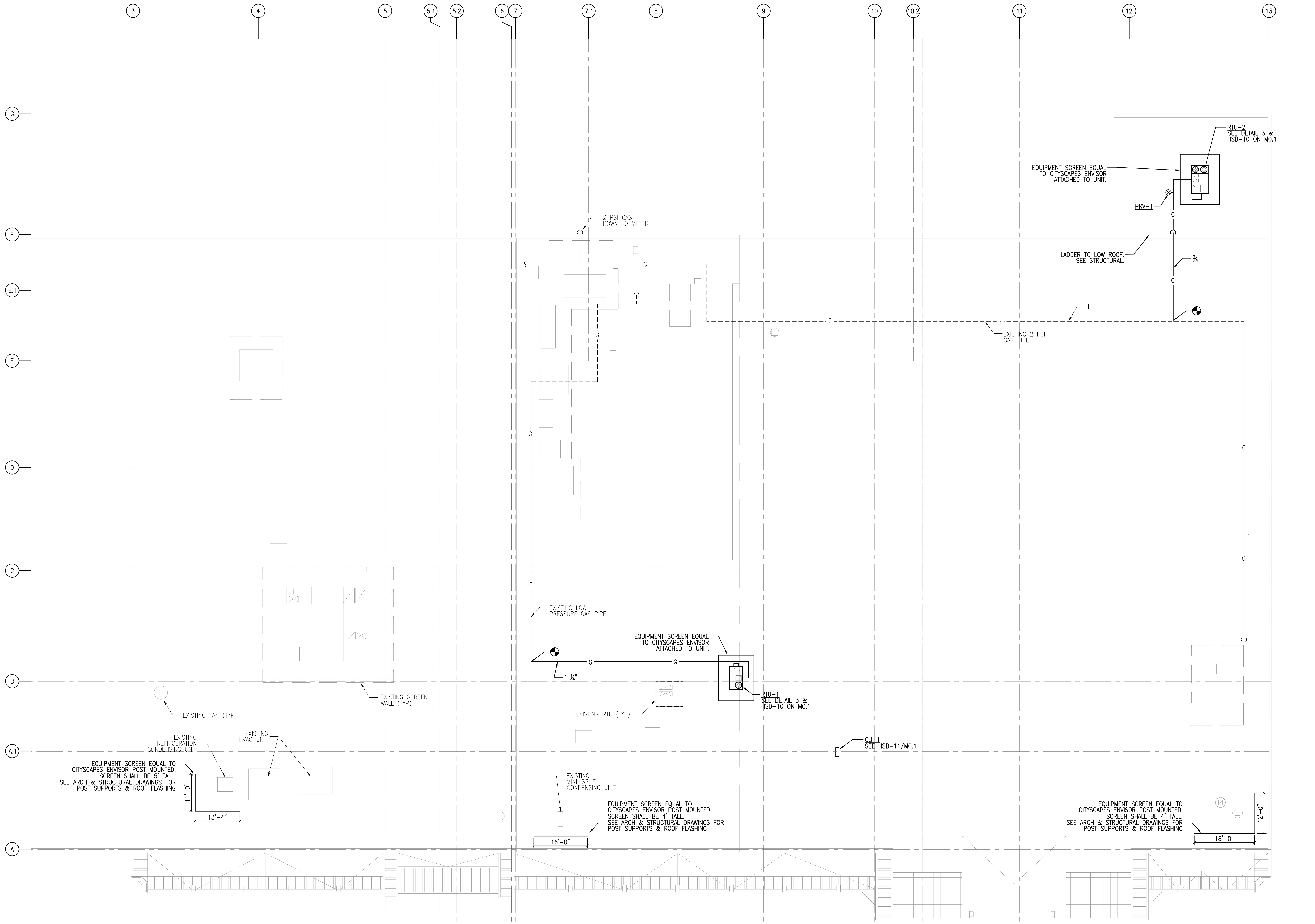


01 HVAC ROOF PLAN

SCALE: 3/32" = 1'-0"   0' 4' 8' 16'

NORTH

## GENERAL HVAC NOTES

1. PROVIDE INSULATION AND UV TAPE FOR ALL EXTERIOR HVAC REFRIGERATION PIPE IN THIS PROJECT.
2. ALL ROOF EQUIPMENT INSTALLED IN THIS PROJECT, THAT WILL REQUIRE MAINTENANCE, SHALL BE NO LESS THAN 10' AWAY FROM THE ROOF'S EDGE.
3. PROVIDE POLYCARBONATE GAS PIPE SUPPORTS FOR GAS PIPE IN WORK. SEE PSD-35 ON PLUMBING DRAWINGS.
4. PIPE SIZES SHOWN FOR EXISTING GAS PIPES ARE TAKEN FROM EXISTING DRAWINGS. NOTIFY ENGINEER AND KROGER P.M. OF ANY SIZE DISCREPANCIES.


Kroger FRESH FOR EVERYONE

KROGER
STORE #387
240 NEW BYHALIA RD
COLLIERVILLE, TENNESSEE
38017
A DEVELOPMENT OF:
THE KROGER COMPANY

naos
Naos Design Group, LLC

4949 SOUTH SYRACUSE ST.
SUITE 460
DENVER, COLORADO 80237
(p) 303.759.5777
(f) 720.360.4281
www.naosdg.com

ARCHITECT OF RECORD
MARC BREETZ

d|fab
DESIGN FABRICATIONS
1100 EAST MANDOLINE AVE.
SUITE 100
MADISON HEIGHTS, MI 48071
T 800.968.9440
F 248.597.0989 designers@dfabdesign.com
INTERIOR DECOR

Pickering
Pickering Firm, Inc.
Architecture · Engineering
Planning · Surveying
6363 Poplar Avenue, Suite 300
Memphis, TN 38119
901.726.0810
STRUCTURAL

Pickering
Pickering Firm, Inc.
Architecture · Engineering
Planning · Surveying
6363 Poplar Avenue, Suite 300
Memphis, TN 38119
901.726.0810
PLUMBING, MECHANICAL, ELECTRICAL,

Pickering
Pickering Firm, Inc.
Architecture · Engineering
Planning · Surveying
6363 Poplar Avenue, Suite 300
Memphis, TN 38119
901.726.0810
CIVIL


### ISSUE LOG

| NO. | REV. | DESCRIPTION | DATE |
|---|---|---|---|
| 1 | - | PERMIT SET | 10/11/2021 |

| JOB: | SCALE: |
|---|---|
| 2021169 | AS SHOWN |

SHEET NO.

# M1.2

HVAC ROOF PLAN


COPYRIGHT © 2021 NAOS DESIGN GROUP, LLC.
THESE DRAWINGS, OR PARTS THEREOF, MAY NOT BE REPRODUCED IN ANY FORM, BY ANY METHOD, FOR ANY PURPOSE, WITHOUT PRIOR WRITTEN CONSENT FROM NAOS

## ROOFTOP UNIT SCHEDULE

| MARK | SA (CFM) | OSA (CFM) | TSP (in. w.g.) | COOLING | | | | HEATING | ELECTRICAL DATA | | | | BASIS OF DESIGN (LENNOX) | ROOF CURB PART # (AES INDUSTRIES) | APPROX. WEIGHT (lb) | TONNAGE (NOMINAL) | LOCATION | NOTES |
|---|---|---|---|---|---|---|---|---|---|---|---|---|---|---|---|---|---|---|
| | | | | EAT (°F db) | EAT (°F wb) | TOT. CAP. (MBH) | SEN. CAP. (MBH) | INPUT (MBH) | EVAP. (hp) | MCA | MOCP | VOLTAGE | | | | | | |
| RTU-1 | 1,750 | 200 | 0.94 | 75.9 | 63.5 | 58.5 | 43.8 | 108 | 1.0 | 14 | 20 | 460/3 | LGH060H4E | STANDARD ROOF CURB | 950 | 5 | FRONT OFFICES | ①②③④⑦⑧⑨⑬ |
| RTU-2 | 4,000 | 400 | 1.08 | 75.5 | 63.2 | 118.5 | 90.4 | 180 | 2.0 | 24 | 30 | 460/3 | LGH120H4M | STANDARD ROOF CURB | 1,400 | 10 | DOCK | ①②③④⑦⑧⑨⑬ |

NOTES (NOT ALL NOTES ARE USED):

① OWNER MAINTAINS A NATIONAL ACCOUNT WITH LENNOX, ROOFTOP UNITS WILL BE OWNER PROVIDED. CONTRACTOR IS RESPONSIBLE FOR SCHEDULING, RECEIPT AND COMPLETE INSTALLATION OF ROOFTOP UNITS.

② CURBS, CURB ADAPTERS, DUCT CURBS, PLENUM CURBS, AND SERVICE PLATFORMS ARE CONTRACTOR PROVIDED FROM AES INDUSTRIES. CONTRACTOR IS RESPONSIBLE FOR COORDINATING WITH SUBMITTED RTUS AS WELL AS SCHEDULING, RECEIPT, AND COMPLETE INSTALLATION OF ROOFTOP UNIT CURBS. CONTACT PAUL LEDBETTER AT 334-283-3468

③ UNIT SHALL HAVE SENSORS / THERMOSTATS AS SPECIFIED FOR THE OWNER PROVIDED ENERGY MANAGEMENT SYSTEM.

④ SEE SPECIFICATIONS FOR OPTIONS, CONTROLS, AND ACCESSORIES REQUIRED.

⑤ UNIT PROVIDED WITH TEMPERATURE ADJUST WITH OFFSET CONTROL.

⑥ PROVIDED WITH HEAT RECLAIM COIL.

⑦ PROVIDE WITH A WATER-LEVEL MONITORING DEVICE INSIDE THE PRIMARY DRAIN PAN WHICH SHALL SHUT OFF THE EQUIPMENT SERVED IN THE EVENT THE PRIMARY DRAIN PAN BECOMES RESTRICTED..

⑧ PROVIDE ECONOMIZER

⑨ UNIT SELECTED AT ELEVATION OF 300 FT.

⑩ PROVIDE CURB ADAPTER. VERIFY DIMENSIONS OF EXISTING CURB & COORDINATE WITH AES INDUSTRIES.

⑪ 3-SIDED SERVICE PLATFORM

⑫ PLENUM CURB

⑬ ROOFTOP UNITS TO HAVE NON-FUSED DISCONNECT AND CONVENIENCE OUTLET TO BE FIELD POWERED BY DIVISION 26. EACH INTERNAL RTU CIRCUIT IS INDIVIDUALLY FUSED.

## AIR DISTRIBUTION SCHEDULE

| MARK | TYPE | SIZE (INCHES) | | FINISH | O.B.D. | BASIS OF DESIGN (TITUS) | NOTES |
|---|---|---|---|---|---|---|---|
| | | NECK | FACE | | | | |
| Ⓐ | SUPPLY | --- | --- | WHITE | NO | ADB-1-15-4 (AES INDUSTRIES) | ①② |
| Ⓑ | RETURN / TRANSFER EXHAUST | SEE DWGS. | SEE DWGS. | WHITE | --- | 50F | ①③④⑤⑥⑦ |
| Ⓒ | SUPPLY | 12"ø | 24x24 | WHITE | --- | TDC-A4 | ①⑤⑥⑦ |

ALL AIR DISTRIBUTION DEVICES SHALL BE CONTRACTOR PROVIDED.
SOME AIR DISTRIBUTION DEVICES MAY NOT BE USED. VERIFY USAGE WITH FLOOR PLAN.
NOTES (NOT ALL NOTES ARE USED):

① DIFFUSER MOUNTING STYLE SHALL BE CONFIRMED WITH THE REFLECTED CEILING PLAN.

② 4 WAY DISCHARGE, UP TO 6,000 CFM, DROP BOX DIFFUSER BOTTOM FACE DIMENSION 35x35. CONTRACTOR TO VERIFY FIRE SPRINKLER REQUIREMENT.

③ OMIT SCREW HOLES IN LAY-IN CEILINGS.

④ PROVIDE 6" HIGH SQUARE-TO-ROUND TRANSITION.

⑤ PROVIDE O.B.D.s IN NECK OF GRILLES IN SHEETROCK CEILINGS.

⑥ PROVIDE FULL-FACE VANES IN FACE OF DIFFUSER/GRILLE

⑦ PROVIDE RADIATION DAMPERS IN CEILING MOUNTED DIFFUSERS & GRILLES

## GAS PRESSURE REGULATOR SCHEDULE

| MARK | GAS CFH | INLET PRESSURE (PSI) | | OUTLET PRESSURE (in.) | DOWNSTREAM PIPE SIZE |
|---|---|---|---|---|---|
| | | MAX. | MIN. | | |
| PRV-1 | 180 | 2.0 | 1.0 | 7 | 3/4" |

**NOTES:**

**①PROVIDE DIRT LEG AND SHUT-OFF VALVE UPSTREAM OF GAS REGULATOR UNLESS NOTED OTHERWISE.**

**②VENT PRV THRU ROOF AS NECESSARY**

## FAN COIL AND CONDENSING UNIT SCHEDULE

| INDOOR UNIT | | | | | | | | | | | | | OUTOOR UNIT | | | | | | | | | |
|---|---|---|---|---|---|---|---|---|---|---|---|---|---|---|---|---|---|---|---|---|---|---|
| MARK | CFM (HIGH) | MIN O/A | EXT S.P. | COOLING | | | HEATING | | | ELECTRICAL DATA | | | BASIS OF DESIGN (MITSUBISHI) | LOCATION | MARK | COOLING CAP. 95°F AMB. (MBH) | HEATING CAP. 17°F AMB. (MBH) | ELECTRICAL DATA | | | BASIS OF DESIGN (MITSUBISHI) | SPLIT SYSTEM EPRO | ROOF CURB PART # | NOTES |
| | | | | TOTAL (MBH) | E.A.T. D.B. | E.A.T. W.B. | TOTAL (MBH) | E.A.T. D.B. | E.A.T. W.B. | MCA | MOCP | VOLTAGE | | | | | | MCA | MOCP | VOLTAGE | | | | |
| FCU-1 | 425 | -0- | --- | 12.0 | 80 | 67 | 11.0 | 70 | 60 | 1.0 | --- | 208V/1ϕ | PKA-A12HA7 | ACCOUNTING | CU-1 | 12.0 | 11.0 | 11 | 15 | 208V/1ϕ | PUZ-A12NKA7 | K-0064128 | 42486 | ①②③④⑤ |

① FCU/CU SPLIT SYSTEM OWNER PROVIDED, CONTRACTOR INSTALLED.

② PROVIDE WITH LOCKING MOUNT KIT, CONDENSATE PUMP, LOW AMBIENT CONTROLLER, WINTER START KIT, WIND BAFFLE, CRANKCASE HEATER, START ASSIST, AND LIQUID LINE SOLENOID.

③ CONDENSATE PUMP REQUIRES A SEPARATE 110V POWER SOURCE. PROVIDE CONDENSATE PUMP STRONG ENOUGH TO LIFT CONDENSATE UP AND SPILL ON ROOF.

④ PROVIDE CONDENSER COIL HAIL GUARDS.

⑤ CURBS ARE CONTRACTOR PROVIDED FROM AES INDUSTRIES. CONTRACTOR IS RESPONSIBLE FOR COORDINATING WITH SUBMITTED CONDENSING UNITS AS WELL AS SCHEDULING, RECEIPT, AND COMPLETE INSTALLATION. CONTACT PAUL LEDBETTER AT 334-283-3468


Kroger
FRESH FOR EVERYONE™
KROGER STORE #387
240 NEW BYHALIA RD
COLLIERVILLE, TENNESSEE 38017
A DEVELOPMENT OF: THE KROGER COMPANY

naos
Naos Design Group, LLC
4949 SOUTH SYRACUSE ST.
SUITE 460
DENVER, COLORADO 80237
(p) 303.759.5777
(f) 720.360.4281
www.naosdg.com
ARCHITECT OF RECORD
MARC BREETZ

d|fab
DESIGN FABRICATIONS
1100 EAST MANDOLINE AVE.
SUITE 100
MADISON HEIGHTS, MI 48071
T 800.968.9440
F 248.597.0989 designers@dfabdesign.com
INTERIOR DECOR

Pickering
Pickering Firm, Inc.
Architecture · Engineering
Planning · Surveying
6363 Poplar Avenue, Suite 300
Memphis, TN 38119
901.726.0810
STRUCTURAL

Pickering
Pickering Firm, Inc.
Architecture · Engineering
Planning · Surveying
6363 Poplar Avenue, Suite 300
Memphis, TN 38119
901.726.0810
PLUMBING, MECHANICAL, ELECTRICAL,

Pickering
Pickering Firm, Inc.
Architecture · Engineering
Planning · Surveying
6363 Poplar Avenue, Suite 300
Memphis, TN 38119
901.726.0810
CIVIL


ISSUE LOG

| NO. | REV. | DESCRIPTION | DATE |
|---|---|---|---|
| 1 | - | PERMIT SET | 10/11/2021 |

| JOB: | SCALE: |
|---|---|
| 2021169 | AS SHOWN |

SHEET NO.

M6.1

HVAC SCHEDULES


COPYRIGHT © 2021 NAOS DESIGN GROUP, LLC.
THESE DRAWINGS, OR PARTS THEREOF, MAY NOT BE REPRODUCED IN ANY FORM, BY ANY METHOD, FOR ANY PURPOSE, WITHOUT PRIOR WRITTEN CONSENT FROM NAOS



October 11, 2021 12:01pm jhamilton
L:\2021\2021169.000\CAD\M-SET\Sheets\M6.1 HVAC SCHEDULES.dwg

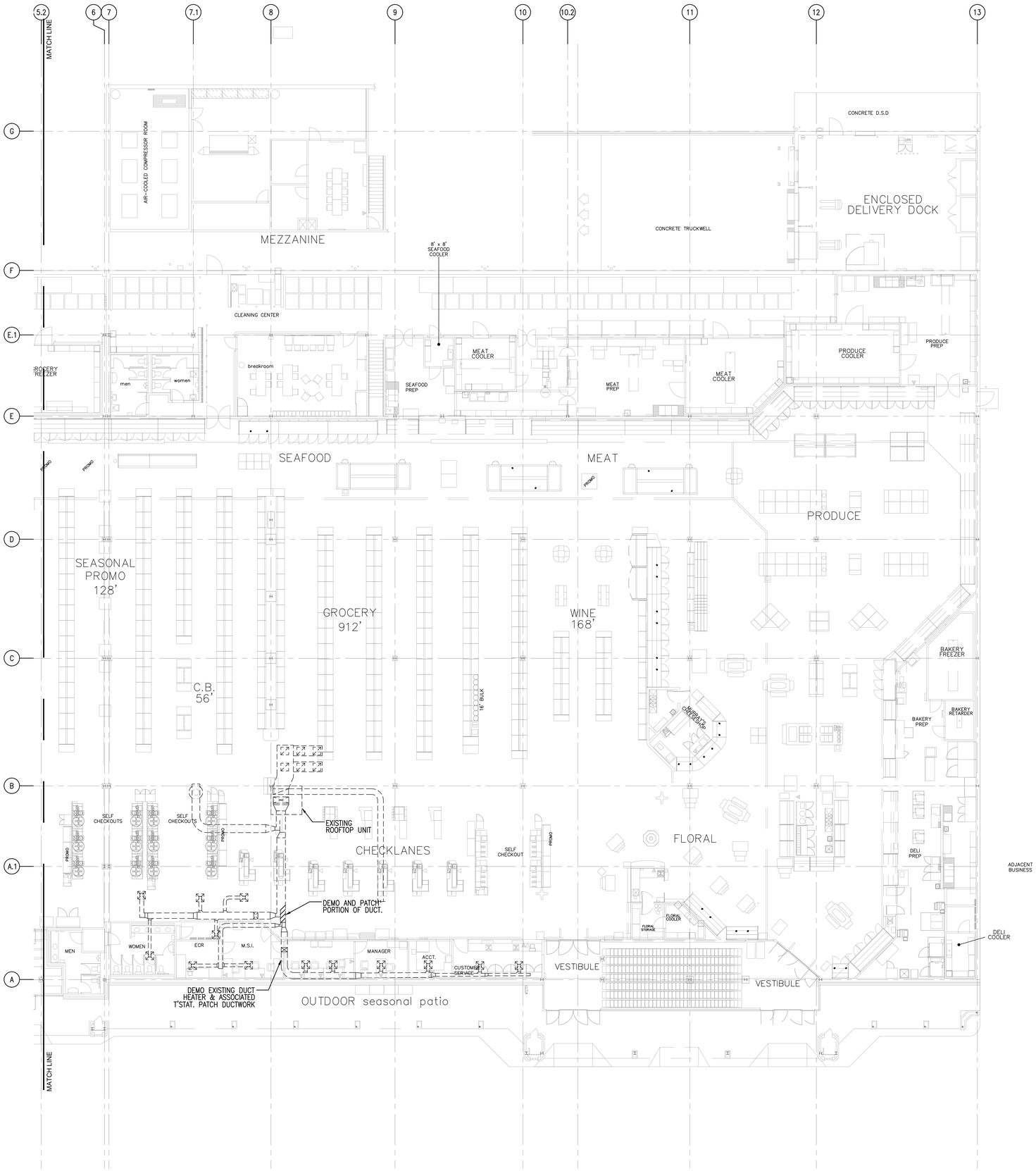


## 01 HVAC DEMO PLAN

SCALE: 3/32" = 1'-0"

## EXISTING GENERAL HVAC NOTES

1. THESE DRAWINGS ARE BASED ON GENERAL STORE DRAWINGS. CONTRACTOR TO FIELD VERIFY EXISTING CONDITIONS PRIOR TO BIDDING OF PROJECT. WHERE ANY EQUIPMENT ON ROOF IS DISTURBED, IT IS THE HVAC CONTRACTOR'S RESPONSIBILITY TO COORDINATE WITH THE GENERAL CONTRACTOR FOR THE REPAIR OF ANY ROOFING ITEMS AFTER THE COMPLETION OF HVAC WORK.
2. ALL EQUIPMENT SHALL BE CONSIDERED EXISTING UNLESS OTHERWISE NOTED. EXISTING EQUIPMENT NOT SHOWN SHALL REMAIN UNCHANGED.
3. DAMAGED DIFFUSERS: IT IS THE CONTRACTOR'S RESPONSIBILITY TO IDENTIFY AND REPAIR ANY DAMAGED DIFFUSERS.
   PRE BID: LOCATE AND ITEMIZE EXPECTED QUANTITY OF DAMAGED DIFFUSERS TO BE REPLACED.
   CONSTRUCTION: COORDINATE WITH KROGER ENGINEER FOR REPLACING OF DAMAGED DIFFUSERS.
4. EXISTING DIFFUSERS TO REMAIN: IT IS THE CONTRACTOR'S RESPONSIBILITY TO CLEAN ALL EXISTING DIFFUSERS AND RETURN GRILLES THAT ARE NOT REPLACED.
5. DEMOED DUCTWORK AND DIFFUSERS SHALL BE TAKEN DOWN AND PROPERLY DISPOSED OF.

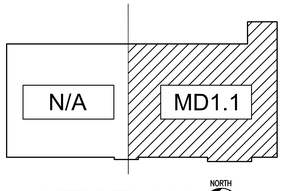


KEY PLAN

SCALE: NOT TO SCALE


Kroger
FRESH FOR EVERYONE™

KROGER STORE #387
240 NEW BYHALIA RD
COLLIERVILLE, TENNESSEE 38017
A DEVELOPMENT OF: THE KROGER COMPANY

naos
Naos Design Group, LLC
4949 SOUTH SYRACUSE ST.
SUITE 460
DENVER, COLORADO 80237
(p) 303.759.5777
(f) 720.360.4281
www.naosdg.com
ARCHITECT OF RECORD
MARC BREETZ

d|fab
DESIGN FABRICATIONS
1100 EAST MANDOLINE AVE.
SUITE 100
MADISON HEIGHTS, MI 48071
T 800.968.9440
F 248.597.0989 designers@dfabdesign.com
INTERIOR DECOR

Pickering
Pickering Firm, Inc.
Architecture · Engineering
Planning · Surveying
6363 Poplar Avenue, Suite 300
Memphis, TN 38119
901.726.0810
STRUCTURAL

Pickering
Pickering Firm, Inc.
Architecture · Engineering
Planning · Surveying
6363 Poplar Avenue, Suite 300
Memphis, TN 38119
901.726.0810
PLUMBING, MECHANICAL, ELECTRICAL,

Pickering
Pickering Firm, Inc.
Architecture · Engineering
Planning · Surveying
6363 Poplar Avenue, Suite 300
Memphis, TN 38119
901.726.0810
CIVIL


ISSUE LOG

| NO. | REV. | DESCRIPTION | DATE |
|---|---|---|---|
| 1 | - | PERMIT SET | 10/11/2021 |

| JOB: | SCALE: |
|---|---|
| 2021169 | AS SHOWN |

SHEET NO.

# MD1.1

HVAC DEMO PLAN


COPYRIGHT © 2021 NAOS DESIGN GROUP, LLC. THESE DRAWINGS, OR PARTS THEREOF, MAY NOT BE REPRODUCED IN ANY FORM, BY ANY METHOD, FOR ANY PURPOSE, WITHOUT PRIOR WRITTEN CONSENT FROM NAOS


October 11, 2021 12:01pm/jhamilton
F:\26236.00\CAD- V-387\Sheets\MD1.1 HVAC DEMO PLAN.dwg