MECHANICAL LEGEND

SUPPLY DUCT UP	PIPING DOWN
SUPPLY DUCT DOWN	PIPING UP
RETURN DUCT UP	TURNING VANES
RETURN DUCT DOWN	VOLUME DAMPER
FD — FIRE DAMPER	—C— CONDENSATE DRAIN
SD — SMOKE DAMPER	M — MOTORIZED DAMPER
CD — COMB. FIRE/SMOKE DAMPER	A — REMOTE ANNUNCIATOR
BD — BACKDRAFT DAMPER	S — REMOTE TEMP. SENSOR
SD — SMOKE DETECTOR	T — THERMOSTAT
SPIN-IN WITH VOLUME DAMPER	H — HUMIDISTAT
45° RETURN DUCT TAP WITH VOL. DAMPER	FLEX DUCT
DIFFUSER	LINEAR DIFFUSER WITH FLEX CONNECTION
DIFFUSER WITH FLEX CONNECTION	ROUND DUCT UP
GRILLE/REGISTER	ROUND DUCT DOWN
SIDEWALL GRILLE/ REGISTER/ DIFFUSER	REDUCER

ABBREVIATIONS

(A)	EXISTING TO BE ABANDONED	FPI	FINS PER INCH
(D)	EXISTING TO BE DEMOLISHED	GC	GENERAL TRADES CONTRACTOR
(E)	EXISTING TO REMAIN	ID	INNER DIAMETER
(F)	FUTURE	LAT	LEAVING AIR TEMPERATURE
(R)	EXISTING TO BE RELOCATED	LWT	LEAVING WATER TEMPERATURE
AAV	AUTOMATIC AIR VENT	MAU	MAKEUP AIR UNIT
AFF	ABOVE FINISHED FLOOR	MC	MECHANICAL CONTRACTOR
AHJ	AUTHORITY HAVING JURISDICTION	MFR	MANUFACTURER
AMB	AMBIENT	N/A	NOT APPLICABLE
APD	AIR PRESSURE DROP	NC	NORMALLY CLOSED
BAS	BUILDING AUTOMATIC SYSTEM	NO	NORMALLY OPEN
BFP	BACKFLOW PREVENTER	NTS	NOT TO SCALE
BLDG	BUILDING	OA	OUTSIDE AIR
BOB	BOTTOM OF BEAM	OD	OUTSIDE DIAMETER
BOD	BOTTOM OF DUCT	PD	PRESSURE DROP
BOP	BOTTOM OF PIPE	PRV	PRESSURE REDUCING VALVE
BOS	BOTTOM OF STRUCTURE	RA	RETURN AIR
CL	CENTER LINE	REL	RELIEF AIR
DB	DRY BULB	RTU	ROOFTOP UNIT
DIA	DIAMETER	SA	SUPPLY AIR
DN	DOWN	SCC	SENSIBLE COOLING CAPACITY
EA	EXHAUST AIR	SP	STATIC PRESSURE
EAT	ENTERING AIR TEMPERATURE	TCP	TEMPERATURE CONTROL PANEL
EC	ELECTRICAL CONTRACTOR	TSP	TOTAL STATIC PRESSURE
EF	EXHAUST FAN	TYP	TYPICAL
EFF	EFFICIENCY	UNO	UNLESS NOTED OTHERWISE
EG	ETHYLENE GLYCOL	VFD	VARIABLE FREQUENCY DRIVE
ESP	EXTERNAL STATIC PRESSURE	WB	WET BULB
EWT	ENTERING WATER TEMPERATURE	WG	WATER GAUGE
EXH	EXHAUST	WPD	WATER PRESSURE DROP

GENERAL NOTES:

A. ALL WORK TO BE PERFORMED TO MEET ALL STATE, CITY & LOCAL CODE REQUIREMENTS.

B. ALL WALL PATCHING TO BE BY GC.

C. MC IS TO COORDINATE WITH OTHER TRADES BEFORE INSTALLING DUCTWORK. IF THE MC FAILS TO COORDINATE WITH OTHER TRADES AND THE WORK MUST BE ALTERED THE MC WILL CHANGE IT AT HIS OWN EXPENSE.

D. COORDINATE THE EXACT LOCATION OF ALL GRILLES, REGISTERS & DIFFUSER WITH ARCHITECTURAL REFLECTED CEILING PLAN.

E. MECHANICAL CONTRACTOR IS TO VISIT THE SITE PRIOR TO SUBMITTING A BID & INCLUDE IN THE BID ANY ITEMS NECESSARY FOR A COMPLETE & OPERATIONAL SYSTEM.

F. DRAWINGS ARE SCHEMATIC IN NATURE & MC IS TO INCLUDE ANY ITEMS REQUIRED FOR A COMPLETE & OPERATIONAL SYSTEM WHETHER SHOWN OR NOT SHOWN ON THE DRAWINGS.

G. MC TO FURNISH ALL PERMITS REQUIRED FOR HIS PORTION OF THE WORK.

H. MC TO COORDINATE WITH ELECTRICAL CONTRACTOR CONCERNING ELECTRICAL REQUIREMENTS BEFORE ORDERING ANY EQUIPMENT.

I. CONTRACTOR IS RESPONSIBLE FOR ADHERING TO THE ENTIRETY OF THIS DRAWING SET, INCLUDING BUT NOT LIMITED TO; PLANS, ELEVATIONS, DETAILS, SCHEDULES, AND SPECIFICATIONS. CONTRACTOR IS RESPONSIBLE FOR COORDINATION OF ALL DRAWINGS OF OTHER TRADES, INCLUDING BUT NOT LIMITED TO, ARCHITECTURAL, PLUMBING, ELECTRICAL, CIVIL, AND STRUCTURAL.

J. ALL CUTTING AND PATCHING OF ROOF IS TO BE BY GC.

SEQUENCE OF OPERATION

A. PROVIDE STAND ALONE OR APPLICATION SPECIFIC CONTROLLERS AS REQUIRED TO PERFORM THE FOLLOWING SEQUENCES OF OPERATIONS.

B. PACKAGED ROOFTOP UNITS

1. UNIT SHALL CONSIST OF SUPPLY AIR FAN, FILTERS, DX COOLING COIL, GAS-FIRED HEAT SECTION, AND A 7-DAY PROGRAMMABLE THERMOSTAT.

2. PROVIDE AN OVERRIDE SWITCH TO OPERATE THE UNIT DURING UNOCCUPIED HOURS. THIS SWITCH SHALL BE PART OF THE PROGRAMMABLE THERMOSTAT. OVERRIDE SWITCH ALLOWS THE UNIT TO OPERATE FOR TWO HOURS (ADJUSTABLE).

3. OCCUPIED MODE: BASED ON THE ROOFTOP UNIT'S HOURS OF OCCUPANCY, START THE UNIT AT THE BEGINNING OF OCCUPANCY AND SHUT DOWN THE UNIT AT THE END OF OCCUPANCY (NOTE: OUTSIDE AIR DAMPER WITHIN THE RTU SHALL OPEN AND THEN THE RTU SHALL START). THE UNIT SHALL START EARLIER AS DETERMINED BY THE PROGRAM FOR EARLY WARM-UP OR COOL DOWN. ON A SYSTEM STARTUP, THE RTU FAN SHALL START AND RUN CONTINUOUSLY AND THE INTERNAL FACTORY CONTROLS SHALL BE ENABLED. BASED ON THE SPACE TEMPERATURE SENSOR, THE UNIT SHALL CYCLE THE HEATING/COOLING TO MAINTAIN THE SPACE TEMPERATURE SETPOINT.

   3.1. ECONOMIZER MODE: WHEN ENTHALPY OF OA IS BELOW 28 BTU/LB, ECONOMIZER MODE SHALL BE ENABLED. ECONOMIZER MODE SHALL LINEARLY MODULATE OUTDOOR AIR CFM FROM MINIMUM OA CFM TO 100% BASED ON ENTHALPY READINGS.

   3.2. HUMIDITY CONTROL (WHEN NEEDED BASED ON CLIMATE): UPON DETECTION OF RELATIVE HUMIDITY ABOVE 55%, THE UNIT SHALL CYCLE INTO DEHUMIDIFICATION MODE IF NOT ALREADY IN COOLING.

4. UNOCCUPIED MODE: THE RTU INTERNAL OA DAMPERS SHALL REMAINED CLOSED WHEN THE BUILDING IS NOT OCCUPIED. THE RTU SHALL STOP HEATING/COOLING AND THE FAN SHALL STOP. IF THE SPACE TEMPERATURE FALLS BELOW 60 DEGREE F (ADJUSTABLE), THE UNIT SHALL START AND HEAT UNTIL THE SPACE TEMPERATURE IS 64 DEGREE F (ADJUSTABLE) AND THEN SHUTDOWN. IF THE SPACE TEMPERATURE RISES ABOVE 85 DEGREE F (ADJUSTABLE), THE UNIT SHALL START AND COOL UNTIL THE SPACE TEMPERATURE IS 80 DEGREE F (ADJUSTABLE) AND THEN SHUTDOWN.

5. UPON DETECTION OF SMOKE BY UNIT SMOKE DETECTOR BOTH RTUS SHALL SHUT DOWN AND AN ALARM SHALL BE SENT TO THE FIRE ALARM CONTROL PANEL (WHERE APPLICABLE). LOCAL REMOTE ANNUNCIATORS SHALL ALSO BE ACTIVATED.

C. KITCHEN HOOD EXHAUST FAN (KEF-1)

   1.1. THE KITCHEN HOOD EXHAUST FAN SHALL BE ENABLED WHEN ANY COOKING APPLIANCE LOCATED UNDER ITS RESPECTIVE HOOD, IS IN USE.

D. MAKE UP AIR UNIT

   1.1. THE MAKE UP AIR UNIT SHALL BE ENABLED WHEN THE KITCHEN HOOD EXHUAST FAN (KEF-1) IS ENERGIZED. THE INTERNAL MOTORIZED DAMPER WITHIN WITH MAU-1 SHALL OPEN AND THE FAN SHALL RUN. IF OA IS LESS THAN 65° (ADJ.), THE MAU-1 GAS-FIRED HEAT SECTION SHALL BE ENABLED TO MAINTAIN A MINIMUM OF 65°.

   1.2. WHEN KEF-1 IS OFF, MAU-1 SHALL BE DE-ENERGIZED AND THE INTERNAL MOTORIZED DAMPER SHALL CLOSE.

E. ANSUL SYSTEM ACTIVATION

   1.1. UPON ACTIVATION OF ANSUL SYSTEM, SHUT DOWN MAU-1, RTU-1 AND RTU-2. PROVIDE RELAYS, CONTACTS, INTERLOCKS, TRANSFORMERS AND ALL ASSOCIATED WIRING TO ACCOMPLISH SEQUENCE. MAU-1 IS ALREADY PREWIRED TO SHUT DOWN IN HOOD CONTROL PANEL. MECHANICAL CONTRACTOR SHALL INTERLOCK RTU-1 AND RTU-2 TO ALSO SHUT DOWN.

CORE STATES GROUP
135 Water Street
Suite 201
Naperville, IL 60540
312.784.3435
core-states.com

ISSUED FOR CONSTRUCTION

CAVA

CAVA - SAGINAW TX
1428 N OLD DECATUR ROAD #150
SAGINAW, TX 76179
FOR
CAVA
14 Ridge Square NW #500, WASHINGTON, DC 20016

AOR PROJECT NUMBER:
CAV.36838

ISSUE	DATE
TEST FIT	MAR 30, 2023
LEASE EXHIBIT	APR 13, 2023
LEASE EXHIBIT REV	MAY 25, 2023
LEASE EXHIBIT REV	JUN 13, 2023
SCH DES SET	JUL 21, 2023
PERMIT SET	FEB 5, 2024
BID SET	APR 12, 2024
1 BUILDING REVIEW	MAY 7, 2024
IFC SET	JUL 1, 2024

GENERAL INFORMATION
MECHANICAL

SHEET:
M000

2/5/2024 7:40 PM

SCOPE NOTES:

A. LANDLORD IS RESPONSIBLE FOR PROVIDING AND INSTALLING ALL DUCTWORK AND DUCTWORK ACCESSORIES SHOWN ON PLANS AS EXISTING. CONTRACTOR TO MAINTAIN EXISTING DUCTWORK AND CONNECT WITH NEW DUCTWORK AS SHOWN. FIELD VERIFY EXACT SIZE AND LOCATION.

GENERAL NOTES:

A. DO NOT PENETRATE KITCHEN EXHAUST HOODS OR DUCTWORK WITH ANY TYPE OF FASTENING ASSEMBLY (I.E. SCREWS, RIVETS).

B. IF NOT PAINTED, ALL DUCTWORK SHALL HAVE A GASKET SEAL.

C. EXPOSED DUCTWORK IN THE DINING AREA SHALL BE MADE OF ELECTRO-GALVANIZED STEEL (PAINTLOCK). SEE MECHANICAL SPECIFICATIONS FOR ADDITIONAL INFORMATION.

CODED NOTES: (#)

1. MOUNT REGISTER AT 15° ANGLE ON SIDE OF DUCT. ADJUST DIFFUSER BLADES TO 45° PATTERN. BALANCE AIR SCOOP TO CFM INDICATED.
2. ROUTE RETURN DUCT AND PROVIDE FULL METAL ANGLE WITH BIRD SCREEN. OPENING SHALL BE AT BOTTOM OF JOIST LOCATION, FIELD VERIFY.
3. 8x8 EXHAUST DUCT UP THROUGH ROOF.
4. INSTALL LED TOUCHSCREEN 24/7 PROGRAMMABLE THERMOSTAT (WITH CONTROLS LOCKED BY CODE) MOUNTED AT 48" AFF. COORDINATE EXACT LOCATION WITH OWNER.
5. ROUTE 16" Ø CUSTOM FABRICATED TYPE 1 KITCHEN EXHAUST DUCT UP THROUGH ROOF ABOVE AND CONNECT TO KITCHEN EXHAUST FAN, REFER TO SHEET M201 FOR CONTINUATION. COORDINATE WITH KES AND CAPTIVE AIRE DRAWINGS. SEAL WEATHER TIGHT.
6. REMOTE TEMPERATURE AVERAGING SENSOR MOUNTED AT 48" AFF FOR RTU-1. WIRE BACK TO THERMOSTAT AT MANAGERS DESK.
7. REMOTE TEMPERATURE SENSOR MOUNTED WITHIN RETURN DUCT FOR RTU-2. WIRE BACK TO THERMOSTAT AT MANAGERS DESK.
8. PROVIDE AUDIO/VISUAL REMOTE SMOKE DETECTOR ANNUNCIATOR WITH REMOTE KEY OPERATED RESET FOR SMOKE DETECTOR MOUNTED AT 48" AFF. ALIGN ANNUNCIATOR WITH THERMOSTAT OR SENSOR WHERE APPLICABLE.
9. ROUTE 16" Ø CUSTOM FABRICATED TYPE 1 KITCHEN EXHAUST DUCT DOWN FROM CEILING SPACE AND CONNECT TO HOOD. COORDINATE WITH KES AND CAPTIVE AIRE DRAWINGS. CONTRACTOR SHALL PROVIDE CLEANOUT EVERY 20' AND AT EVERY CHANGE OF DIRECTION IN TYPE 1 EXHAUST DUCT.
10. ROUTE 18"X18" MAKE UP AIR DUCT UP THROUGH ROOF ABOVE AND CONNECT TO MAKE UP AIR UNIT, REFER TO SHEET M201 FOR CONTINUATION. COORDINATE WITH KES AND CAPTIVE AIRE DRAWINGS. SEAL WEATHER TIGHT.
11. EXISTING SUPPLY AND RETURN DUCT DROPS THROUGH ROOF. CONNECT NEW DUCTWORK IN APPROXIMATE LOCATION SHOWN. FIELD VERIFY EXACT LOCATION PRIOR TO COMMENCING WORK.
12. SUPPLY AIR DUCT MOUNTED AT 11'-6" TO THE BOTTOM OF THE DUCT. CONTRACTOR TO PROVIDE AND INSTALL DUCT MOUNTED SUPPLY GRILLES IN LOCATIONS SHOWN. FIELD VERIFY AND COORDINATE WITH EXISTING CONDITIONS PRIOR TO COMMENCING WORK.
13. PROVIDE DUCT MOUNTED SMOKE DETECTOR IN RETURN AIR DUCT. UPON DETECTION OF SMOKE UNIT SHALL DE-ENERGIZE.
14. ROUTE 24"X8" SUPPLY AIR DUCT DOWN FROM CEILING SPACE AND CONNECT TO SUPPLY AIR PLENUM ON HOOD. PROVIDE BALANCING DAMPER AND BALANCE TO 390 CFM. REFER TO KES AND CAPTIVE AIRE DRAWINGS FOR ADDITIONAL INFORMATION.
15. ROUTE 28"X12" MAKEUP AIR DUCT DOWN FROM CEILING SPACE AND CONNECT TO MAKE UP AIR PLENUM ON HOOD. CONNECT TO EXISTING 18x18 OUTDOOR AIR DUCT PROVIDED BY LANDLORD. PROVIDE BALANCING DAMPER AND BALANCE TO 658 CFM. REFER TO KES AND CAPTIVE AIRE DRAWINGS FOR ADDITIONAL INFORMATION.
16. PROVIDE AIR CURTAIN ABOVE ENTRANCE DOOR. INSTALL PER MANUFACTURES RECOMMENDATIONS.
17. TYPE 1 GREASE EXHAUST HOOD, REFER TO KES AND CAPTIVE AIRE DRAWINGS FOR ADDITIONAL INFORMATION.
18. ROUTE 3" COMBUSTION AIR AND FLUE DOWN FROM CEILING SPACE AND CONNECT TO WATER HEATER, INSTALLATION SHALL BE PER MANUFACTURERS RECOMMENDATIONS.
19. EXTEND 3" COMBUSTION AIR AND FLUE IN CEILING SPACE. FIELD VERIFY EXACT ROUTING.
20. EXTEND 3" COMBUSTION AIR AND FLUE UP TO CONCENTRIC VENT THROUGH ROOF ABOVE, REFER TO SHEET M201 FOR ADDITIONAL INFORMATION.
21. PROVIDE AIR CURTAIN ABOVE DRIVE THROUGH WINDOW. INSTALL PER MANUFACTURES RECOMMENDATIONS.
22. REMOTE BALANCING DAMPER, TYPICAL FOR BALANCING DAMPERS IN HARD CEILING APPLICATIONS.
23. PROVIDE CO2 MEASUREMENT SPECIALISTS RAD-0102-6 REMOTE CO2 STORAGE SAFETY ALARM (OR EQUAL), INSTALL PER MANUFACTURER'S RECOMMENDATIONS.

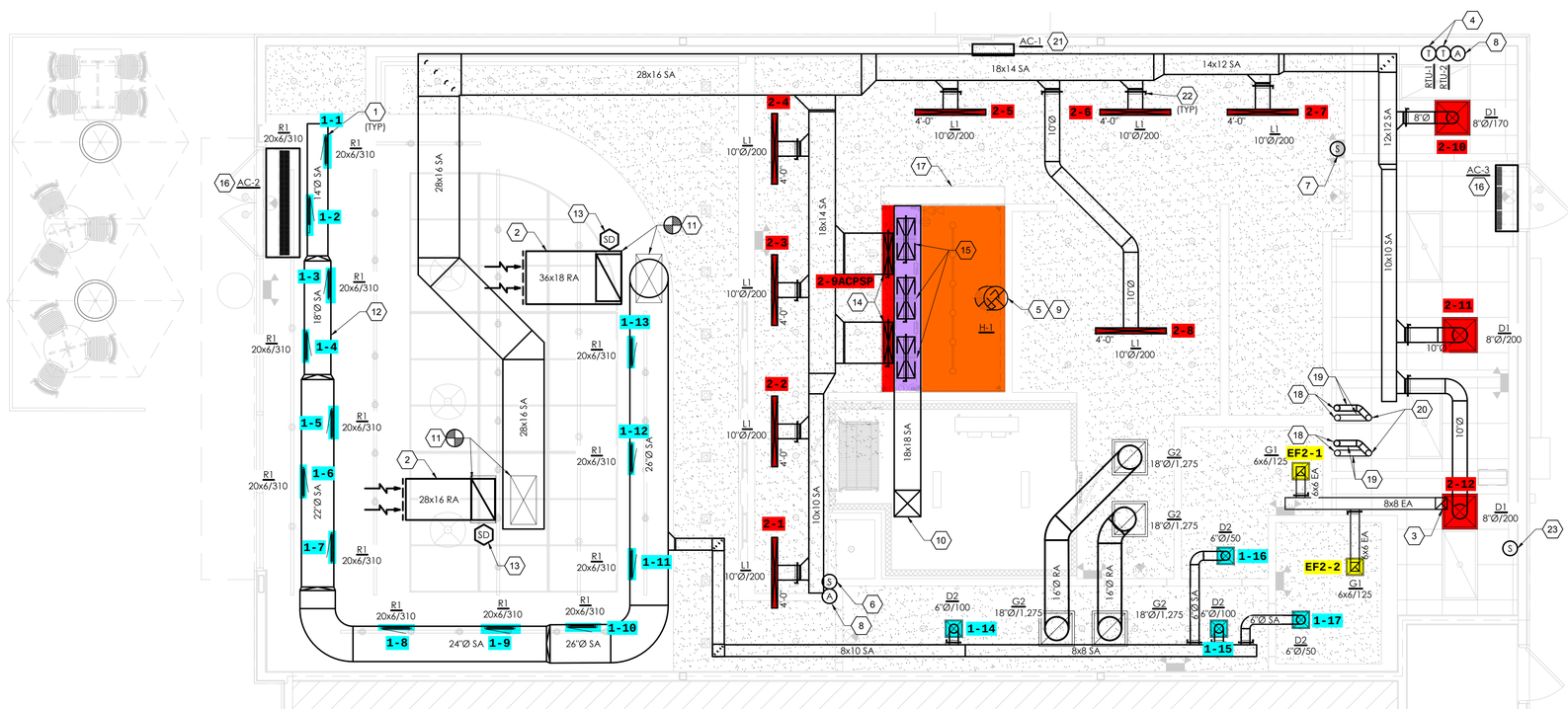

1 M101 MECHANICAL PLAN

1/4" = 1'-0"

4/10/2024 1:03 PM

CORE STATES GROUP

135 Water Street
Suite 201
Naperville, IL 60540
312.218.3415
core-states.com

ISSUED FOR CONSTRUCTION

CAVA

CAVA - SAGINAW TX
1428 N OLD DECATUR ROAD #150
SAGINAW, TX 76179
FOR
CAVA
14 Ridge Square NW #500, WASHINGTON, DC 20016

AOR PROJECT NUMBER:
CAV.36838

ISSUE	DATE
TEST FIT	MAR 30, 2023
LEASE EXHIBIT	APR 13, 2023
LEASE EXHIBIT REV	MAY 25, 2023
LEASE EXHIBIT REV	JUN 13, 2023
SCH DES SET	JUL 21, 2023
PERMIT SET	FEB 5, 2024
BID SET	APR 12, 2024
△ BUILDING REVIEW	MAY 7, 2024
IFC SET	JUL 1, 2024

MECHANICAL PLAN

SHEET:

M101

SCOPE NOTES:

A. LANDLORD IS RESPONSIBLE FOR PROVIDING AND INSTALLING ALL PACKAGED ROOF TOP UNITS SHOWN ON PLAN AS EXISTING (RTU-1 & RTU-2). THIS INCLUDES ALL STRUCTURAL SUPPORTS, ROOF CURBS, DUCT DROPS, ELECTRICAL WIRING, GAS PIPING, AND STARTUP/COMMISSIONING.

GENERAL NOTES:

A. DO NOT PENETRATE KITCHEN EXHAUST HOODS OR DUCTWORK WITH ANY TYPE OF FASTENING ASSEMBLY (I.E. SCREWS, RIVETS).

CODED NOTES:

1. EXISTING ROOFTOP UNIT.
2. INSTALL NEW MAKE-UP AIR UNIT ON MANUFACTURERS ROOF CURB. CONTRACTOR SHALL CUT, PATCH, FLASH, AND AND COUNTER FLASH AROUND ROOF CURB TO MAINTAIN ANY APPLICABLE ROOF WARRANTY.
3. INSTALL NEW HOOD EXHAUST FAN ON MANUFACTURERS ROOF CURB, ENSURE LOCATION IS A MINIMUM OF 10' - 0" FROM ANY OUTSIDE AIR INTAKES. CONTRACTOR SHALL CUT, PATCH, FLASH, AND AND COUNTER FLASH AROUND ROOF CURB TO MAINTAIN ANY APPLICABLE ROOF WARRANTY.
4. INSTALL NEW RESTROOM EXHAUST FAN ON NEW ROOF CURB. ENSURE LOCATION IS A MINIMUM OF 10' - 0" FROM ANY OUTSIDE AIR INTAKES.
5. EXISTING 4" VENT THROUGH ROOF, CONTRACTOR SHALL ENSURE LOCATION IS A MINIMUM OF 10' - 0" FROM ANY OUTSIDE AIR INTAKES.
6. NEW COMBINATION AIR INTAKE AND FLUE EXHAUST FOR WATER HEATER, INSTALL PER MANUFACTURERS RECOMMENDATIONS, CONTRACTOR SHALL ENSURE LOCATION IS A MINIMUM OF 10' - 0" FROM ANY OUTSIDE AIR INTAKES.
7. ENSURE TO MAINTAIN 10'-0" CLEARANCE TO OUTSIDE AIR INTAKES.
8. CONDENSING UNIT MOUNTED ON ROOF, SEE KES PLANS FOR MORE INFORMATION.

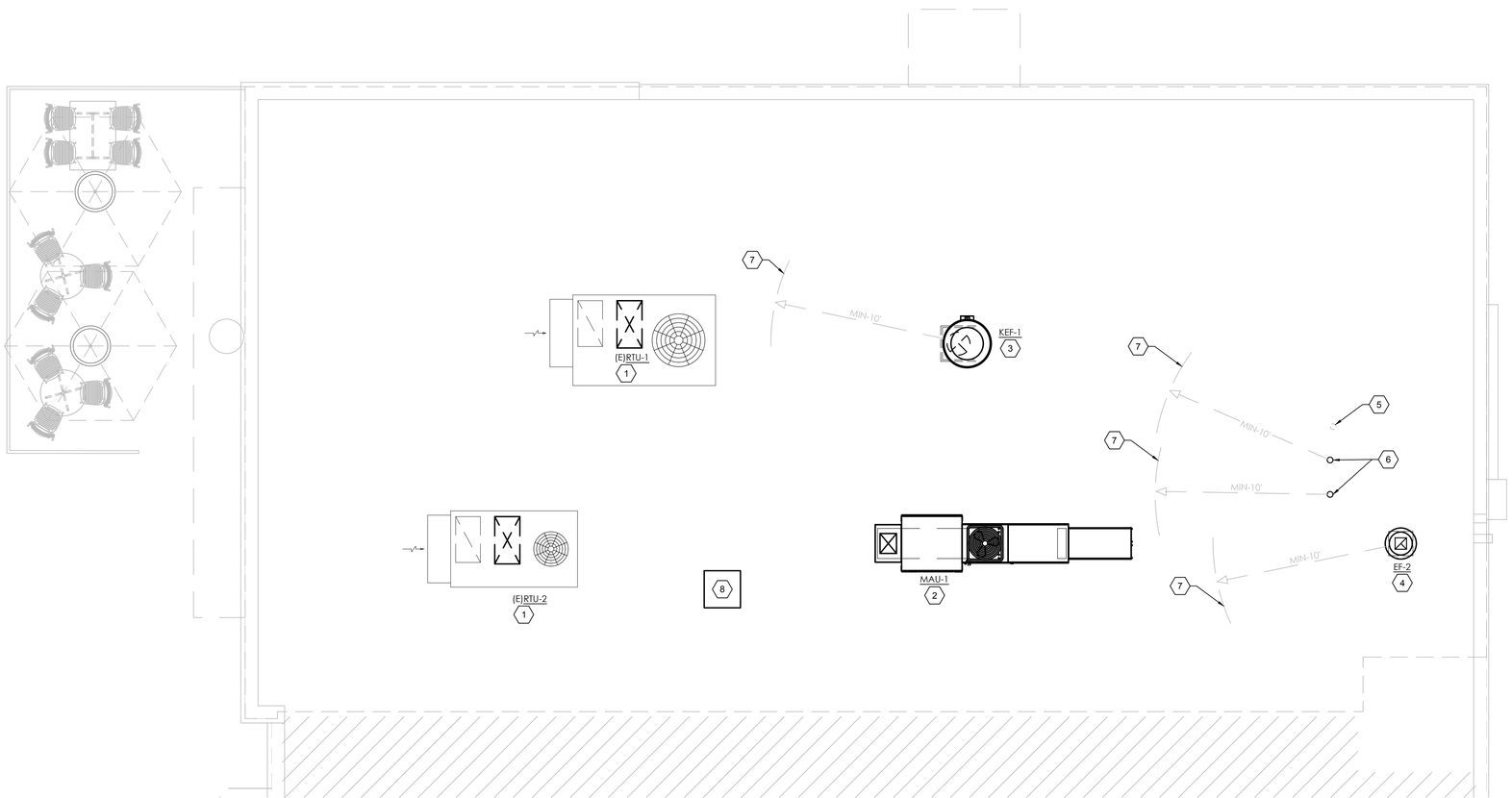

1 M201 MECHANICAL ROOF PLAN
1/4" = 1'-0"

2/7/2024 12:34 PM

CORE STATES GROUP
135 Water Street
Suite 201
Naperville, IL 60540
312.718.5415
core-states.com

ISSUED FOR CONSTRUCTION

CAVA

CAVA - SAGINAW TX
1428 N OLD DECATUR ROAD #150
SAGINAW, TX 76179
FOR
CAVA
14 Ridge Square NW #500, WASHINGTON, DC 20016

AOR PROJECT NUMBER:
CAV.36838

ISSUE	DATE
TEST FIT	MAR 30, 2023
LEASE EXHIBIT	APR 13, 2023
LEASE EXHIBIT REV	MAY 25, 2023
LEASE EXHIBIT REV	JUN 13, 2023
SCH DES SET	JUL 21, 2023
PERMIT SET	FEB 5, 2024
BID SET	APR 12, 2024
BUILDING REVIEW	MAY 7, 2024
IFC SET	JUL 1, 2024

MECHANICAL ROOF PLAN

SHEET:
M201

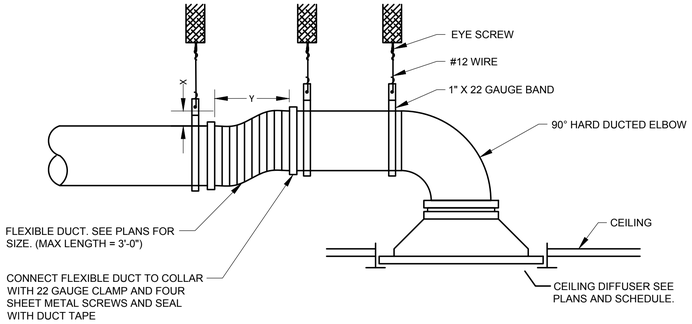

LIMITED CEILING SPACE

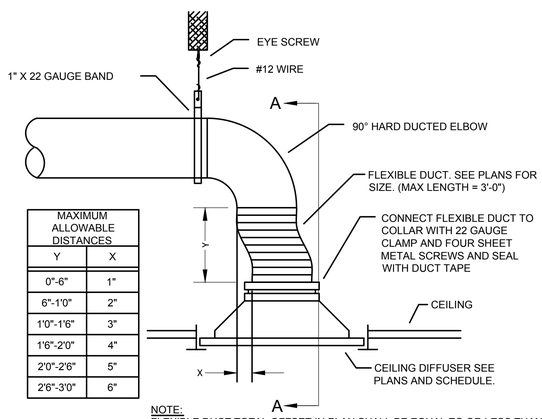

MAXIMUM ALLOWABLE DISTANCES	
Y	X
0"-6"	1"
6"-1'0"	2"
1'0"-1'6"	3"
1'6"-2'0"	4"
2'0"-2'6"	5"
2'6"-3'0"	6"

NOTE:
FLEXIBLE DUCT TOTAL OFFSET IN PLAN SHALL BE EQUAL TO OR LESS THAN THE VALUE SHOWN IN THIS DETAIL (IN ANY DIRECTION).

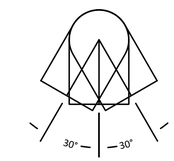

NOTE:
ELBOW SHALL BE ALLOWED TO ROTATE A MAXIMUM 30°.

SECTION A-A

5 CEILING DIFFUSER DETAIL
N.T.S.

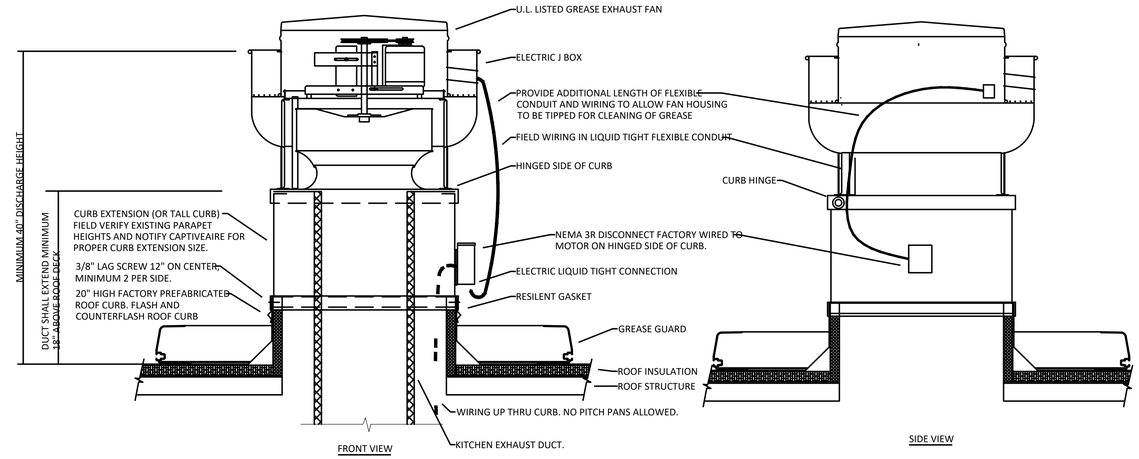

NOTES:
1. INSTALLATION SHALL BE IN ACCORDANCE WITH NFPA 96 REQUIREMENTS.
2. CUT AND PATCH EXISTING ROOFING AS REQUIRED FOR NEW CURB INSTALLATION (CONFIRM IF BY LL BASED ON WORK LETTER).
3. CURB SHALL BE TAPERED TYPE AND MATCH THE PITCH OF THE ROOF.
4. CONTRACTOR TO PROVIDE TREATED WOOD BLOCKINGS AND SHIM FLAT ROOF CURB TILL LEVEL FOR ALL EXHAUST FANS AND TO ACHIEVE ROOF CURB HEIGHTS. PROVIDE ROOF CURB EXTENSION IF REQUIRED.

3 GREASE EXHAUST FAN DETAIL
N.T.S.

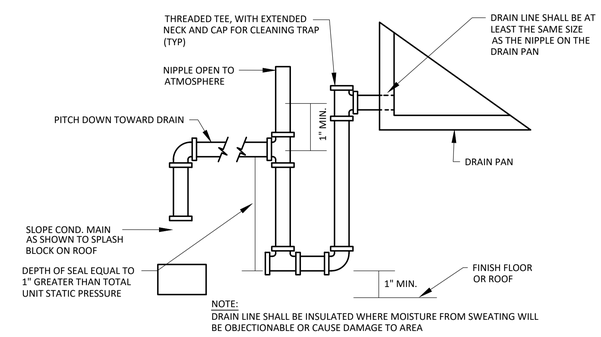

NOTE:
DRAIN LINE SHALL BE INSULATED WHERE MOISTURE FROM SWEATING WILL BE OBJECTIONABLE OR CAUSE DAMAGE TO AREA

2 CONDENSATE DRAIN DETAIL
N.T.S

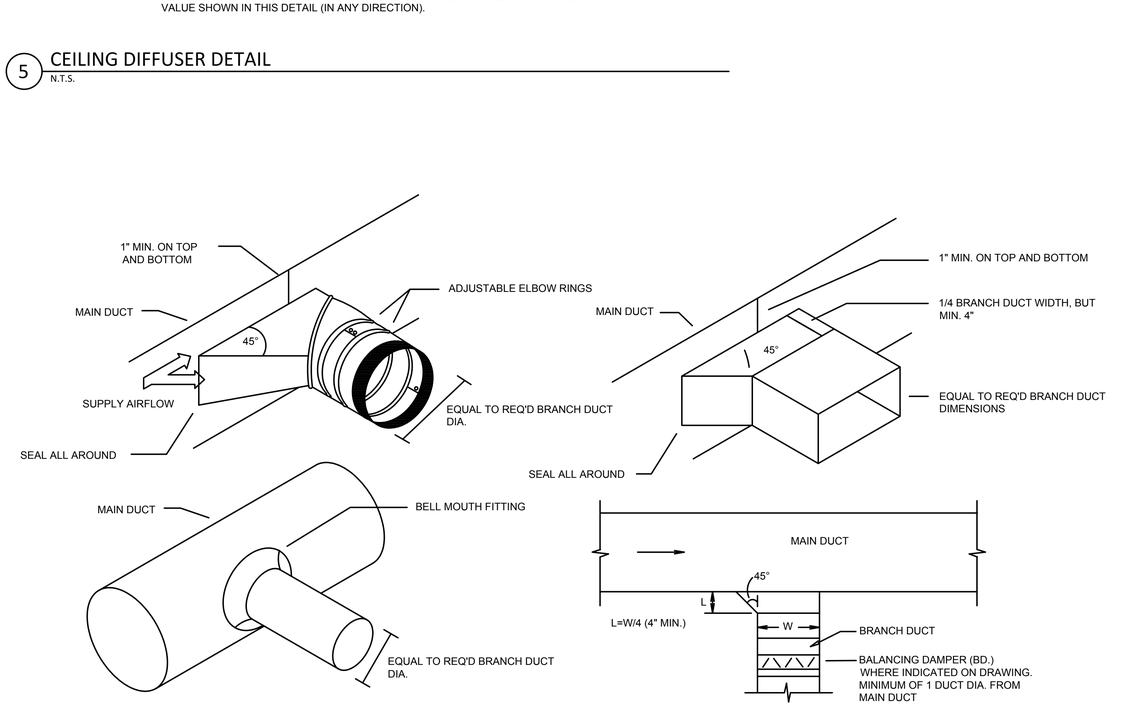

4 DUCT BRANCH DETAIL
N.T.S.

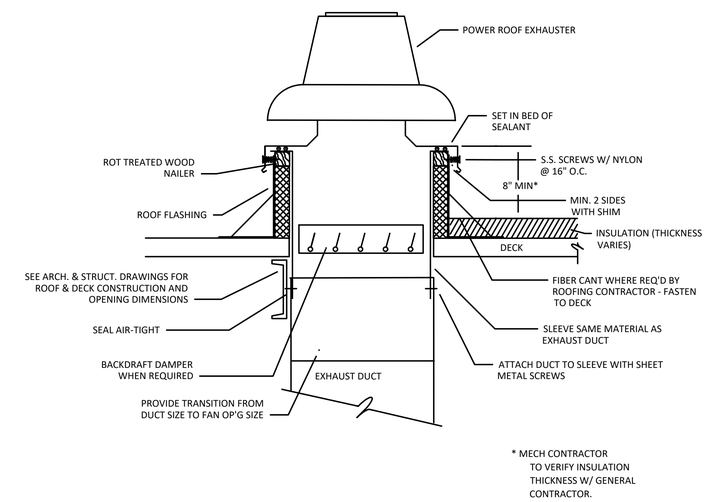

* MECH CONTRACTOR TO VERIFY INSULATION THICKNESS W/ GENERAL CONTRACTOR.

1 GENERAL EXHAUST FAN DETAIL
N.T.S.

CORE STATES GROUP
135 Water Street
Suite 201
Naperville, IL 60540
312.218.4445
core-states.com

ISSUED FOR CONSTRUCTION

CAVA

CAVA - SAGINAW TX
1428 N OLD DECATUR ROAD #150
SAGINAW, TX 76179
FOR
CAVA
14 Ridge Square NW #500, WASHINGTON, DC 20016

AOR PROJECT NUMBER:
CAV.36838

ISSUE	DATE
TEST FIT	MAR 30, 2023
LEASE EXHIBIT	APR 13, 2023
LEASE EXHIBIT REV	MAY 25, 2023
LEASE EXHIBIT REV	JUN 13, 2023
SCH DES SET	JUL 21, 2023
PERMIT SET	FEB 5, 2024
BID SET	APR 12, 2024
1 BUILDING REVIEW	MAY 7, 2024
IFC SET	JUL 1, 2024

MECHANICAL DETAILS

SHEET:
M401

10/6/2023 4:53 PM

ROOFTOP UNIT SCHEDULE (FOR REFERENCE ONLY)

OUTSIDE AIR CONDITIONS: SUMMER DB/WB: 94°F/75°F, WINTER DB: 15.8°F

TAG	MANUFACTURER	MODEL	TONS	AIRFLOW				HEATING (MBH)				COOLING (MBH)			COOLING DESIGN AMBIENT (105°F)	ELECTRICAL			WEIGHT (LBS)	NOTES
				CFM	OA MIN	ESP	MOTOR HP	INPUT	OUTPUT	STAGES	AFUE %	TOTAL	SENS.	EER/IEER		MCA	MOCP	VOLT/PH		
(E)RTU-1	TRANE	YSJ150A3S0L	12.5	4,330	675	1.10	4.6	150	122	2	81	155.1	118.4	10.8/14.0	105°F DB / 75°F WB	64	90	208/3	1,420	1
(E)RTU-2	TRANE	YSJ102A3S0L	8.5	2,950	350	1.50	3	120	98	2	81	98.5	78.0	11.0/14.6	105°F DB / 75°F WB	48	60	208/3	1,105	1

NOTES:
1. EQUIPMENT PROVIDED AND INSTALLED BY LANDLORD.

MAKEUP AIR UNIT SCHEDULE

THIS EQUIPMENT HAS BEEN SELECTED AND APPROVED BY CAPTIVEAIRE. ALL INFORMATION PERTINENT TO THIS UNIT SHALL BE THE SOLE RESPONSIBILITY OF CAPTIVEAIRE.

TAG	MANUFACTURER	MODEL	TONS	AIRFLOW				FAN ELECTRICAL			HEATING (MBH)				COOLING (MBH)			COOLING DESIGN AMBIENT (100°F)	CONDENSER ELECTRICAL				WEIGHT (LBS)	NOTES
				CFM	OA MIN	ESP	MOTOR HP	MCA	MOCP	VOLT/PH	INPUT	OUTPUT	STAGES	AFUE %	TOTAL	SENS.	EER/SEER		CONDENSER NO.	MCA	MOCP	VOLT/PH		
MAU-1	CAPTIVEAIRE	A1-D.250-15D-MPU	(2) 2.5	1,976	1,976	0.35	2	7.7	15	208/3	108	98	1	92	56.8	44.5	--/14	105°F EDB / 75°F EWB	1	14.5	20	208/3	1,076	1

NOTES:
1. REFER TO KES AND CAPTIVEAIRE DRAWINGS FOR ADDITIONAL INFORMATION.

KITCHEN HOOD SCHEDULE

THIS EQUIPMENT HAS BEEN SELECTED AND APPROVED BY CAPTIVEAIRE. ALL INFORMATION PERTINENT TO THIS UNIT SHALL BE THE SOLE RESPONSIBILITY OF CAPTIVEAIRE.

UNIT DATA					LIGHTS		MISCELLANEOUS		NOTES
TAG	MODEL	HOOD LENGTH	MAX. COOKING TEMP	TOTAL EXHAUST CFM	QTY	TYPE	FIRE SUPP. SYSTEM	HANGING WEIGHT (LBS)	
H-1	6030 ND-2-ACPSP-F	10'-7"	600°F	2,381	6	L55 SERIES E26	YES	1,147	1

NOTES:
1. REFER TO KES AND CAPTIVEAIRE DRAWINGS FOR ADDITIONAL INFORMATION.

AIR BALANCE SCHEDULE

TAG	SUPPLY CFM	RETURN CFM	OUTDOOR AIR CFM	EXHAUST CFM	
(E)RTU-1	4,330	3,655	675	- - -	BUILDING PRESSURE
(E)RTU-2	2,950	2,600	350	- - -	
MAU-1	1,976	- - -	1,976	- - -	
KEF-1	- - -	- - -	- - -	2,381	
EF-2	- - -	- - -	- - -	250	
TOTAL	9,256	6,255	3,001	2,631	370 CFM

EXHAUST FAN SCHEDULE

TAG	MANUFACTURER	MODEL	FUNCTION	FAN TYPE	CFM	ESP	DAMPER	BELT OR DIRECT	SONES RATING	HP	VOLT	PHASE	NOTES
KEF-1	CAPTIVEAIRE	DU85HFA	HOOD EXHAUST	UPBLAST	2,381	1.0	- - -	DIRECT	17.3	1.0	115	1	1
EF-2	GREENHECK	G-080-VG	RESTROOM EXHAUST	DOWNBLAST	250	0.3	BDD	DIRECT	7.25	0.05	115	1	2-3

NOTES:
1. FAN SHALL BE INTERLOCKED WITH HOOD CONTROLS, REFER TO KES AND CAPTIVEAIRE DRAWINGS FOR ADDITIONAL INFORMATION.
2. FAN SHALL OPERATE DURING OCCUPIED HOURS.
3. PROVIDE VARIABLE SPEED CONTROLLER FOR ALL DIRECT DRIVE FANS, TEST AND BALANCE CONTRACTOR SHALL MARK BALANCED POSITION ON CONTROLLER.

AIR CURTAIN SCHEDULE

TAG	MANUFACTURER	MODEL	NOZZLE WIDTH	SERVICE	CFM	MOTOR HP	VOLT/PH	WEIGHT (LBS)	NOTES
AC-1	BERNER	DTU03-2026A	24.5"	DRIVE-THROUGH WINDOW	200	(1) 1/5, (1) 1/20	120/1	16	1-2
AC-2	BERNER	AE08-E-1072A	72"	ENTRANCE	1,978	(1) 1/5	120/1	100	1-2
AC-3	BERNER	SHD07-1042A	42"	BACK OF HOUSE	1,752	(1) 3/4	120/1	52	1-2

NOTES:
1. PROVIDE WITH INTEGRAL DISCONNECT SWITCH AND WALL MOUNTING BRACKET.
2. COORDINATE COLOR WITH ARCHITECT.

GRILLES, REGISTERS, AND DIFFUSERS SCHEDULE

TAG-NECK SIZE
CFM

D = DIFFUSER G = GRILLE
R = RESISTER

TAG	FUCTION	MODEL	MANUFACTURER	FACE SIZE	FRAME TYPE	MATERIAL	FINISH	BALANCE DAMPER	MAX N.C.	COMMENTS	NOTES
D1	SUPPLY	PAS	TITUS	24" X 24"	LAY-IN	STEEL	WHITE	- - -	25	- - -	1-7
D2	SUPPLY	OMNI	TITUS	12" X 12"	SURFACE	STEEL	WHITE	- - -	25	- - -	1,3-7
R1	SUPPLY	S300FS	TITUS	20" X 6"	DUCT	ALUMINUM	BLACK	AIR SCOOP	25	- - -	4-5 & 7
L1	SUPPLY	FL-20-22	TITUS	48" X 4.75"	SURFACE	ALUMINUM	WHITE	- - -	25	1 SLOT, 2" SLOT WIDTH	3-7
G1	RETURN/EXHAUST	350RL	TITUS	12" X 12"	SURFACE	STEEL	BLACK	- - -	25	- - -	3-7
G2	RETURN	350RL	TITUS	24" X 24"	LAY-IN	STEEL	WHITE	- - -	25	- - -	3-7

NOTES:
1. SUPPLY DIFFUSERS TO BE INSULATED VIA FACTORY SYSTEM.
2. WITH NO INTERNAL DEFLECTOR
3. BORDER TYPES SHALL BE COMPATIBLE WITH ARCHITECTURAL CEILING TYPE FOR THE ROOM IN WHICH THE AIR DEVICE IS LOCATED.
4. SEE HVAC PLANS FOR LOCATION AND AIR QUANTITIES OF EACH AIR DEVICE.
5. PROVIDE WITH OPPOSED BLADE DAMPER AS NECESSARY IF CEILING DOES NOT ALLOW FOR ACCESS.
6. PROVIDE LAY-IN MODULE AS NECESSARY.
7. PROVIDE TRANSITION AS NECESSARY.

2/5/2024 6:22 PM

CORE STATES GROUP
135 Water Street
Suite 201
Naperville, IL 60540
312.784.4115
core-states.com

ISSUED FOR CONSTRUCTION

CAVA

CAVA - SAGINAW TX
1428 N OLD DECATUR ROAD #150
SAGINAW, TX 76179
FOR
CAVA
14 Ridge Square NW #500, WASHINGTON, DC 20016

AOR PROJECT NUMBER:
CAV.36838

ISSUE	DATE
TEST FIT	MAR 30, 2023
LEASE EXHIBIT	APR 13, 2023
LEASE EXHIBIT REV	MAY 25, 2023
LEASE EXHIBIT REV	JUN 13, 2023
SCH DES SET	JUL 21, 2023
PERMIT SET	FEB 5, 2024
BID SET	APR 12, 2024
1 BUILDING REVIEW	MAY 7, 2024
IFC SET	JUL 1, 2024

MECHANICAL SCHEDULES

SHEET:
M501

SPECIFICATIONS - DIVISION 23 - HVAC

SECTION 230500 - GENERAL MECHANICAL REQUIREMENTS:

HVAC SUBCONTRACTOR SHALL PROVIDE AT BID TIME A BID TO PROVIDE PREVENTATIVE MAINTENANCE SERVICES FOR ONE YEAR.

FURNISH TO THE OWNER ALL OPERATING & MAINTENANCE MANUALS, RECORD DRAWINGS, TEST & BALANCE REPORT. CONTRACTOR SHALL COORDINATE WITH MANUFACTURER REPRESENTATIVES FOR EMPLOYEE TRAINING REQUIREMENTS FOR ALL EQUIPMENT.

MECHANICAL CONTRACTOR SHALL SUBMIT COMPLIANCE CHECKLIST TO BUILDING OFFICIAL UPON SUBSTANTIAL COMPLETION OF PROJECT. PROVIDE EQUIPMENT INDICATED ON THE DRAWINGS, AND AS REQUIRED FOR A COMPLETE FUNCTIONING SYSTEM.

DEFINITIONS:
FURNISH MEANS TO SUPPLY AND DELIVER TO PROJECT SITE, READY FOR INSTALLATION.
INSTALL MEANS TO PLACE IN POSITION AND MAKE CONNECTIONS FOR SERVICE OR USE.
PROVIDE MEANS TO FURNISH AND INSTALL, COMPLETE AND READY FOR INTENDED USE.

WARRANTY:
PROVIDE LABOR AND MATERIALS TO REPAIR OR REPLACE DEFECTIVE PARTS AND MATERIALS AS REQUIRED FOR ONE YEAR AFTER SUBSTANTIAL COMPLETION OR OWNER ACCEPTANCE OF THE COMPLETED PROJECT. PROVIDE A SEPARATE LINE ITEM DEDUCT AMOUNT ON THE PROPOSAL FORM TO DELETE WARRANTY SERVICE, AT THE OWNER'S OPTION. CONTRACTOR SHALL INCLUDE ONE YEAR WARRANTY ON OWNER FURNISHED EQUIPMENT. CONTRACTOR SHALL INCLUDE COSTS FOR RECEIVING, HANDLING, STORAGE, AND HOISTING OF OWNER FURNISHED EQUIPMENT.

COORDINATION:
COORDINATE WITH THE WORK OF OTHER SECTIONS, EQUIPMENT FURNISHED BY OTHERS, REQUIREMENTS OF THE OWNER, AND WITH THE CONSTRAINTS OF THE EXISTING CONDITIONS OF THE PROJECT SITE.

DUCT DIMENSIONS:
UNLESS OTHERWISE NOTED, DUCT DIMENSIONS ON THE DRAWINGS ARE INSIDE CLEAR DIMENSIONS.

TESTING AND BALANCING:
THE OWNER SHALL CONTRACT DIRECTLY WITH SUPERIOR INC. TO PROVIDE A THIRD PARTY TEST AND BALANCE OF THE HVAC SYSTEM. THE GC IS RESPONSIBLE FOR SCHEDULING THE TEST AND BALANCE. CONTACT SUPERIOR INC. (ERIC HOLCOMB) @ (800) 222-1819 AND (615) 479-1578 FOR COORDINATION AND SCHEDULING. IF THE SITE IS NOT READY WHEN SUPERIOR INC. ARRIVES AT THE SCHEDULED TIME, ALL COSTS REQUIRED FOR SUPERIOR TO RETURN TO THE SITE SHALL BE THE GC'S RESPONSIBILITY. TEST AND ADJUST ALL MECHANICAL SYSTEMS AND EQUIPMENT TO ASSURE PROPER BALANCE AND OPERATION. PERFORM TESTS IN ACCORDANCE WITH NBC AND ASHRAE STANDARDS. ELIMINATE NOISE AND VIBRATION, AND ASSURE PROPER FUNCTION OF CONTROLS. SUBMIT COMPLETED TEST AND BALANCE REPORT TO OWNER'S REPRESENTATIVE. BALANCING CONTRACTOR SHALL BE AN INDEPENDENT CERTIFIED TEST AND BALANCE CONTRACTOR, WITH NBC CERTIFICATION. BALANCE ALL SYSTEMS TO WITHIN 5% OF AIR FLOWS INDICATED ON THE DRAWINGS, AND REPORT ALL DISCREPANCIES TO HVAC INSTALLER FOR CORRECTION. MARK FINAL BALANCE POSITIONS ON DAMPERS WITH PERMANENT MARKER.

MAKE-UP AIR UNIT:
UNIT SHALL HAVE AN INTEGRAL DISCHARGE THERMOSTAT LINKED TO THE INTERNAL CONTROLS. THE HEATER SHALL BE SET TO MAINTAIN DUCT SUPPLY TEMPERATURE AT NO LESS THAN 65 DEG. F. (ADJ.).
HIGH LIMIT SWITCH SET TO 180 DEG. F.
INTAKE AIR SENSOR SET TO 10 DEG. F. (ADJ.) LOWER THAN DISCHARGE AIR SENSOR.

TEMPERATURE CONTROLS:
PROVIDE PROGRAMMABLE THERMOSTATS WITH REMOTE TEMPERATURE SENSORS AND REMOTE HUMIDISTATS COMPATIBLE WITH ROOFTOP UNIT. CONTROL WIRING SHALL BE INSTALLED IN CONDUIT. THERMOSTAT SHALL MEET SETPOINT ADJUSTMENT FOR UNOCCUPIED MODE: HEATING DOWN TO 55 DEGREES AND COOLING UP TO 85 DEGREES. PROVIDE INTERLOCK CONTROL WIRING BETWEEN HOOD EXHAUST FANS AND ROOFTOP UNITS.

END OF SECTION

SECTION 230593 - TESTING, ADJUSTING, AND BALANCING FOR HVAC

PART 1 - GENERAL

1.1 SECTION REQUIREMENTS

A. SUBMITTALS:
   1. CERTIFIED TAB REPORTS.
B. TAB FIRM QUALIFICATIONS: NBC CERTIFIED.
C. TAB REPORT FORMS: STANDARD TAB CONTRACTOR'S FORMS APPROVED BY ARCHITECT.

PART 2 - PRODUCTS (NOT USED)

PART 3 - EXECUTION

3.1 EXAMINATION

A. EXAMINE THE CONTRACT DOCUMENTS TO BECOME FAMILIAR WITH PROJECT REQUIREMENTS AND TO DISCOVER CONDITIONS IN SYSTEMS' DESIGNS THAT MAY PRECLUDE PROPER TAB OF SYSTEMS AND EQUIPMENT.
B. EXAMINE THE APPROVED SUBMITTALS FOR HVAC SYSTEMS AND EQUIPMENT.
C. EXAMINE SYSTEMS FOR INSTALLED BALANCING DEVICES, SUCH AS TEST PORTS, GAGE COCKS, THERMOMETER WELLS, FLOW-CONTROL DEVICES, BALANCING VALVES AND FITTINGS, AND MANUAL VOLUME DAMPERS. VERIFY THAT LOCATIONS OF THESE BALANCING DEVICES ARE ACCESSIBLE.
D. EXAMINE SYSTEM AND EQUIPMENT INSTALLATIONS AND VERIFY THAT FIELD QUALITY-CONTROL TESTING, CLEANING, AND ADJUSTING SPECIFIED IN INDIVIDUAL SECTIONS HAVE BEEN PERFORMED.
E. EXAMINE HVAC EQUIPMENT AND FILTERS AND VERIFY THAT BEARINGS ARE GREASED, BELTS ARE ALIGNED AND TIGHT, AND EQUIPMENT WITH FUNCTIONING CONTROLS IS READY FOR OPERATION.
F. EXAMINE TERMINAL UNITS, SUCH AS VARIABLE-AIR-VOLUME BOXES, AND VERIFY THAT THEY ARE ACCESSIBLE AND THEIR CONTROLS ARE CONNECTED AND FUNCTIONING.
G. EXAMINE AUTOMATIC TEMPERATURE SYSTEM COMPONENTS TO VERIFY THE FOLLOWING:
   1. DAMPERS, VALVES, AND OTHER CONTROLLED DEVICES ARE OPERATED BY THE INTENDED CONTROLLER.
   2. DAMPERS AND VALVES ARE IN THE POSITION INDICATED BY THE CONTROLLER.
   3. INTEGRITY OF DAMPERS AND VALVES FOR FREE AND FULL OPERATION AND FOR TIGHTNESS OF FULLY CLOSED THIS INCLUDES DAMPERS IN MULTIZONE UNITS, MIXING BOXES, AND AND FULLY OPEN POSITIONS. VARIABLE-AIR-VOLUME TERMINALS.
   4. AUTOMATIC MODULATING AND SHUTOFF VALVES, INCLUDING TWO-WAY VALVES AND THREE-WAY MIXING AND DIVERTING VALVES, ARE PROPERLY CONNECTED.
   5. THERMOSTATS AND HUMIDISTATS ARE LOCATED TO AVOID ADVERSE EFFECTS OF SUNLIGHT, DRAFTS, AND COLD WALLS.
   6. SENSORS ARE LOCATED TO SENSE ONLY THE INTENDED CONDITIONS.
   7. SEQUENCE OF OPERATION FOR CONTROL MODES IS ACCORDING TO THE CONTRACT DOCUMENTS.
   8. CONTROLLER SET POINTS ARE SET AT INDICATED VALUES.
   9. INTERLOCKED SYSTEMS ARE OPERATING.
   10. CHANGEOVER FROM HEATING TO COOLING MODE OCCURS ACCORDING TO INDICATED VALUES.
H. REPORT DEFICIENCIES DISCOVERED BEFORE AND DURING PERFORMANCE OF TEST AND BALANCE PROCEDURES.

3.2 GENERAL PROCEDURES FOR TESTING AND BALANCING

A. PERFORM TESTING AND BALANCING PROCEDURES ON EACH SYSTEM ACCORDING TO THE PROCEDURES CONTAINED IN AABC'S "NATIONAL STANDARDS FOR TOTAL SYSTEM BALANCE", NBC, ASHRAE 111, NEBB'S "PROCEDURAL STANDARDS FOR TESTING, ADJUSTING, AND BALANCING OF ENVIRONMENTAL SYSTEMS" OR SMACNA'S "HVAC SYSTEMS - TESTING, ADJUSTING, AND BALANCING" AND IN THIS SECTION.
B. CUT INSULATION, DUCTS, PIPES, AND EQUIPMENT CABINETS FOR INSTALLATION OF TEST PROBES TO THE MINIMUM EXTENT NECESSARY FOR TAB PROCEDURES. AFTER TESTING AND BALANCING, PATCH PROBE HOLES IN DUCTS WITH SAME MATERIAL AND THICKNESS AS USED TO CONSTRUCT DUCTS. INSTALL AND JOIN NEW INSULATION THAT MATCHES REMOVED MATERIALS. RESTORE INSULATION, COVERINGS, VAPOR BARRIER, AND FINISH.
C. MARK EQUIPMENT AND BALANCING DEVICES, INCLUDING DAMPER-CONTROL POSITIONS, VALVE POSITION INDICATORS, FAN-SPEED-CONTROL LEVERS, AND SIMILAR CONTROLS AND DEVICES, WITH PAINT OR OTHER SUITABLE, PERMANENT IDENTIFICATION MATERIAL TO SHOW FINAL SETTINGS.

3.3 GENERAL PROCEDURES FOR BALANCING AIR SYSTEMS

A. PREPARE SCHEMATIC DIAGRAMS OF SYSTEMS' "AS-BUILT" DUCT LAYOUTS.
B. FOR VARIABLE-AIR-VOLUME SYSTEMS, DEVELOP A PLAN TO SIMULATE DIVERSITY.
C. DETERMINE THE BEST LOCATIONS IN MAIN AND BRANCH DUCTS FOR ACCURATE DUCT AIRFLOW MEASUREMENTS.
D. VERIFY THAT MOTOR STARTERS ARE EQUIPPED WITH PROPERLY SIZED THERMAL PROTECTION.
E. CHECK FOR AIRFLOW BLOCKAGES.
F. CHECK CONDENSATE DRAINS FOR PROPER CONNECTIONS AND FUNCTIONING.
G. CHECK FOR PROPER SEALING OF AIR-HANDLING UNIT COMPONENTS.
H. CHECK FOR PROPER SEALING OF AIR DUCT SYSTEM.

3.4 TOLERANCES

A. SET HVAC SYSTEM AIRFLOW AND WATER FLOW RATES WITHIN THE FOLLOWING TOLERANCES:
   1. SUPPLY, RETURN, AND EXHAUST FANS AND EQUIPMENT WITH FANS: PLUS OR MINUS 5 PERCENT.
   2. AIR OUTLETS AND INLETS: PLUS OR MINUS 10 PERCENT.

END OF SECTION

SECTION 230700 - HVAC INSULATION

PART 1 - GENERAL

1.1 SECTION REQUIREMENTS

A. QUALITY ASSURANCE: LABELED WITH MAXIMUM FLAME-SPREAD INDEX OF 25 AND MAXIMUM SMOKE-DEVELOPED INDEX OF 50 ACCORDING TO ASTM E 84.

PART 2 - PRODUCTS

2.1 PERFORMANCE REQUIREMENTS

A. SURFACE-BURNING CHARACTERISTICS:
   1. INDOOR INSULATION AND RELATED MATERIALS: TO BE FACTORY LABELED DESIGNATING MAXIMUM FLAME-SPREAD INDEX OF 25 OR LESS, AND SMOKE-DEVELOPED INDEX OF 50 OR LESS ACCORDING TO ASTM E 84.

2.2 INSULATION MATERIALS

A. FLEXIBLE ELASTOMERIC: CLOSED-CELL, SPONGE- OR EXPANDED-RUBBER MATERIALS. COMPLY WITH ASTM C 534, TYPE I FOR TUBULAR MATERIALS AND TYPE II FOR SHEET MATERIALS.
B. MINERAL-FIBER BLANKET INSULATION: COMPLY WITH ASTM C 553, TYPE II AND ASTM C 1290, TYPE I.
   1. FSK JACKET: ALUMINUM-FOIL, FIBERGLASS-REINFORCED SCRIM WITH KRAFT-PAPER BACKING; COMPLYING WITH ASTM C 1136, TYPE II.
   2. FSK TAPE: FOIL-FACE, VAPOR-RETARDER TAPE MATCHING FACTORY-APPLIED JACKET WITH ACRYLIC ADHESIVE; COMPLYING WITH ASTM C 1136.
C. MINERAL-FIBER, PIPE AND TANK INSULATION: COMPLYING WITH ASTM C 1393, TYPE II OR TYPE IIIA CATEGORY 2, OR WITH PROPERTIES SIMILAR TO ASTM C 612, TYPE IB; AND HAVING FACTORY-APPLIED ASJ JACKET. NOMINAL DENSITY IS 2.5 LB/CU. FT. OR MORE. THERMAL CONDUCTIVITY (K-VALUE) AT 100 DEG F IS 0.29 BTU X IN./H X SQ. FT. X DEG F OR LESS.
   1. ASJ: WHITE, KRAFT-PAPER, FIBERGLASS-REINFORCED SCRIM WITH ALUMINUM-FOIL BACKING; COMPLYING WITH ASTM C 1136, TYPE I.
   2. ASJ TAPE: WHITE VAPOR-RETARDER TAPE MATCHING FACTORY-APPLIED JACKET WITH ACRYLIC ADHESIVE, COMPLYING WITH ASTM C 1136.
D. FLEXIBLE ELASTOMERIC ADHESIVE: COMPLY WITH MIL-A-24179A, TYPE II, CLASS I.
E. MINERAL-FIBER ADHESIVE: COMPLY WITH MIL-A-3316C, CLASS 2, GRADE A.
F. VAPOR-BARRIER MASTIC: WATER BASED; SUITABLE FOR INDOOR AND OUTDOOR USE ON BELOW AMBIENT SERVICES; COMPLY WITH MIL-PRF-19565C, TYPE II.

PART 3 - EXECUTION

3.1 INSULATION INSTALLATION

A. COMPLY WITH REQUIREMENTS OF THE MIDWEST INSULATION CONTRACTORS ASSOCIATION'S "NATIONAL COMMERCIAL & INDUSTRIAL INSULATION STANDARDS" FOR INSULATION INSTALLATION ON PIPES AND EQUIPMENT.
B. INSULATION INSTALLATION AT INTERIOR WALL AND PARTITION PENETRATIONS (THAT ARE NOT FIRE RATED): INSTALL INSULATION CONTINUOUSLY THROUGH WALLS AND PARTITIONS.
C. INSULATION INSTALLATION AT FIRE-RATED WALL, PARTITION, AND FLOOR PENETRATIONS: INSTALL INSULATION CONTINUOUSLY THROUGH PENETRATIONS. SEAL PENETRATIONS. COMPLY WITH REQUIREMENTS IN SECTION 078400.
D. FLEXIBLE ELASTOMERIC INSULATION INSTALLATION:
   1. SEAL LONGITUDINAL SEAMS AND END JOINTS WITH ADHESIVE TO ELIMINATE OPENINGS IN INSULATION THAT ALLOW PASSAGE OF AIR TO SURFACE BEING INSULATED.
   2. INSULATION INSTALLATION ON PIPE FITTINGS AND ELBOWS: INSTALL MITERED SECTIONS OF PIPE INSULATION. SECURE INSULATION MATERIALS AND SEAL SEAMS WITH ADHESIVE TO ELIMINATE OPENINGS IN INSULATION THAT ALLOW PASSAGE OF AIR TO SURFACE BEING INSULATED.
E. MINERAL-FIBER INSULATION INSTALLATION:
   1. INSULATION INSTALLATION ON STRAIGHT PIPES AND TUBES: WHERE VAPOR BARRIERS ARE INDICATED, SEAL LONGITUDINAL SEAMS, END JOINTS, AND PROTRUSIONS WITH VAPOR-BARRIER MASTIC AND JOINT SEALANT.
   2. FOR INSULATION WITH FACTORY-APPLIED JACKETS ON ABOVE AMBIENT SURFACES, SECURE LAPS WITH OUTWARD CLINCHED STAPLES AT 6 INCHES O.C.
   3. FOR INSULATION WITH FACTORY-APPLIED JACKETS ON BELOW AMBIENT SURFACES, DO NOT STAPLE LONGITUDINAL TABS BUT SECURE TABS WITH ADDITIONAL ADHESIVE AS RECOMMENDED BY INSULATION MATERIAL MANUFACTURER AND SEAL WITH VAPOR-BARRIER MASTIC AND FLASHING SEALANT.
   4. BLANKET INSULATION INSTALLATION ON DUCTS AND PLENUMS: SECURE WITH ADHESIVE AND INSULATION PINS.
   5. FOR DUCTS AND PLENUMS WITH SURFACE TEMPERATURES BELOW AMBIENT, INSTALL A CONTINUOUS UNBROKEN VAPOR BARRIER
F. PLENUMS AND DUCTS REQUIRING INSULATION:
   1. CONCEALED SUPPLY AIR.
   2. CONCEALED AND EXPOSED OUTDOOR AIR.
   3. CONCEALED AND EXPOSED RETURN AIR LOCATED IN NONCONDITIONED SPACE.

3.2 DUCT AND PLENUM INSULATION SCHEDULE

RETAIN " ONE OF" OPTION IN PARAGRAPHS IN THIS ARTICLE TO ALLOW CONTRACTOR TO SELECT PIPING MATERIALS FROM THOSE RETAINED.

A. CONCEALED DUCT INSULATION SHALL BE 1-1/2” THICK MINERAL-FIBER BLANKET WITH A 1.5-LB/CU. FT. NOMINAL DENSITY.

3.3 HVAC PIPING INSULATION SCHEDULE

A. CONDENSATE PIPING: INSULATION SHALL BE 1” THICK FLEXIBLE ELASTOMERIC.
B. REFRIGERANT PIPING: INSULATION SHALL BE 1” THICK FLEXIBLE ELASTOMERIC.

END OF SECTION

SECTION 232300 - REFRIGERANT PIPING

PART 2 - PRODUCTS

2.1 TUBES AND FITTINGS

A. COPPER TUBE: ASTM B 88, TYPE K OR TYPE L, ANNEALED OR DRAWN-TEMPER TUBING AND WROUGHT-COPPER FITTINGS WITH BRAZED OR SOLDERED JOINTS.
B. WROUGHT-COPPER FITTINGS AND UNIONS: ASME B16.22.
C. SOLDER FILLER METALS: ASTM B 32. USE 95-5 TIN ANTIMONY OR ALLOY HB SOLDER TO JOIN COPPER SOCKET FITTINGS ON COPPER PIPE.
D. BRAZING FILLER METALS: AWS A5.8.

2.2 VALVES AND SPECIALTIES

A. AS REQUIRED BY THE KITCHEN EQUIPMENT MANUFACTURER.

PART 3 - EXECUTION

3.1 INSTALLATION

A. INSTALL REFRIGERANT PIPING AND CHARGE WITH REFRIGERANT ACCORDING TO ASHRAE 15.
B. INSTALL REFRIGERANT PIPING AS REQUIRED BY THE KITCHEN EQUIPMENT MANUFACTURER.

END OF SECTION

SECTION 233100 - HVAC DUCTS AND CASINGS

PART 2 - PRODUCTS

2.1 PERFORMANCE REQUIREMENTS

A. COMPLY WITH SMACNA'S "HVAC DUCT CONSTRUCTION STANDARDS - METAL AND FLEXIBLE."
B. STRUCTURAL PERFORMANCE: DUCT HANGERS AND SUPPORTS SHALL WITHSTAND THE EFFECTS OF GRAVITY LOADS AND STRESSES WITHIN LIMITS AND UNDER CONDITIONS DESCRIBED IN SMACNA'S "HVAC DUCT CONSTRUCTION STANDARDS - METAL AND FLEXIBLE".
C. COMPLY WITH NFPA 96 FOR DUCTS CONNECTED TO COMMERCIAL KITCHEN HOODS.

2.2 DUCTS

A. ELECTROGALVANIZED-STEEL SHEET: ASTM A 879
   1. PAINTLOK/PAINTLOCK OR EQUAL.
B. GENERAL DUCTWORK SHALL BE GALVANIZED STEEL, ASTM A653/A635M, CONSTRUCTED TO THE GAUGE AND CORRESPONDING REINFORCING SCHEDULE AS INDICATED IN THE LATEST EDITION OF SMACNA.
C. TYPE 1 KITCHEN EXHAUST DUCTWORK
   1. FACTORY-BUILT COMMERCIAL KITCHEN GREASE DUCT:
      a. INSTALL REDUCED CLEARANCE, ROUND, DOUBLE-WALL GREASE DUCT AS SPECIFIED MEETING UL 1978 REQUIREMENTS. REFER TO KITCHEN EQUIPMENT SUPPLIER DRAWINGS FOR REQUIREMENTS.
      b. DUCTWORK AND FITTINGS FURNISHED BY OWNER FOR INSTALLATION BY THIS CONTRACTOR.
      c. NO FIRE WRAP SHALL BE REQUIRED FOR THIS INSTALLATION.
D. TYPE 2 KITCHEN EXHAUST DUCTWORK: 18 GAUGE ALUMINUM OR STAINLESS STEEL. SEAMS SHALL BE CONTINUOUSLY WELDED LIQUID TIGHT.
E. JOINT AND SEAM TAPE, AND SEALANT: COMPLY WITH UL 181A. PROVIDE POLYMERIC RUBBER TYPE SEALANT FOR USE ON BOTH INTERIOR LOCATED DUCTWORK AND DUCTWORK EXPOSED TO OUTDOOR CONDITIONS. SEALER SHALL HAVE HIGH BONDING STRENGTH FOR SURE, FIRST TIME SEALING OF JOINTS IN LOW, MEDIUM, AND HIGH PRESSURE DUCT SYSTEMS. SEALER SHALL BE HIGH IN SOLID CONTENT. PROVIDE A TWO PART TAPE SEALING SYSTEM, CONSISTING OF WOVEN FIBER TAPE IMPREGNATED WITH A GYPSUM MINERAL COMPOUND, AND A MODIFIED ACRYLIC/SILICONE ACTIVATOR THAT REACTS EXOTHERMICALLY WITH THE TAPE. TWO PART TAPE SEALING SYSTEM MUST BE RATED FOR BOTH INDOOR AND OUTDOOR APPLICATION. TAPE SHALL NOT CONTAIN ASBESTOS.
F. METAL DUCT FABRICATION: COMPLY WITH SMACNA'S "HVAC DUCT CONSTRUCTION STANDARDS - METAL AND FLEXIBLE."

2.3 ACCESSORIES

A. VOLUME DAMPERS AND CONTROL DAMPERS: SINGLE-BLADE AND MULTIPLE OPPOSED-BLADE DAMPERS, STANDARD LEAKAGE RATING, HEAVY DUTY, AND SUITABLE FOR HORIZONTAL OR VERTICAL APPLICATIONS; FACTORY FABRICATED AND COMPLETE WITH REQUIRED HARDWARE AND ACCESSORIES.
   2. ROUND VOLUME DAMPERS: PROVIDE MINIMUM 20 GAUGE GALVANIZED STEEL FRAME AND BLADES, MINIMUM 3/8" SQUARE STEEL AXLE, MOLDED SYNTHETIC BEARINGS, WITH LOCKING POSITION REGULATOR. REGULATOR SHALL BE POSITIONED WITH SHEET METAL BRACKET BEYOND DUCT COVERING. WHERE POSITIONING REGULATOR IS NOT ACCESSIBLE, PROVIDE COUPLING AND EXTENSION ROD WITH REGULATOR FOR CEILING OR WALL INSTALLATION, AS REQUIRED.
   3. RECTANGULAR VOLUME DAMPERS: PROVIDE MINIMUM 16 GAUGE GALVANIZED STEEL CHANNEL FRAME, 16 GAUGE GALVANIZED STEEL BLADES, MINIMUM ½" HEXAGONAL AXLE, BOLDED SYNTHETIC BEARINGS, WITH 3/8" SQUARE PLATED STEEL CONTROL SHAFT. LINKAGES SHALL BE CONCEALED IN THE FRAME. OPERATING SHAFT SHALL EXTEND BEYOND FRAME AND DUCT TO A LOCKING QUADRANT WITH ADJUSTABLE LEVER. MAXIMUM BLADE WIDTH SHALL NOT EXCEED 6".
B. FLEXIBLE DUCT CONNECTORS: FLAME-RETARDED OR NONCOMBUSTIBLE FABRICS, COATINGS, AND ADHESIVES COMPLYING WITH UL 181, CLASS 1. CONNECTOR TO BE 30 OUNCE, NEOPRENE COATED, FIBERGLASS FABRIC.
C. FLEXIBLE DUCTS: FACTORY ASSEMBLED, UL 181, CLASS 1, WITH 1-1/2-INCH THICK (R-5 MIN.), 1 PCF FIBERGLASS INSULATION AND REINFORCED OUTER PROTECTIVE COVER/VAPOR BARRIER. FLEXIBLE DUCT SHALL MEET NFPA 90A WITH FLAME SPREAD UNDER 25, SMOKE DEVELOPED UNDER 50, AND SHALL BE RATED FOR MINIMUM 2-INCH WG PRESSURE AND 0 TO 250ºF TEMPERATURE. PROVIDE SCREW-OPERATED METAL ADJUSTABLE CLAMPING DEVICES. USE TWIST-LOCK CONICAL TAP COLLARS AT CONNECTIONS INTO SHEET METAL DUCTWORK. MAXIMUM EXTENDED LENGTH OF FLEXIBLE DUCT SHALL NOT EXCEED 5 FEET.
D. TURNING VANES: PROVIDE FABRICATED TURNING VANES AND VANE RUNNERS, CONSTRUCTED IN ACCORDANCE WITH SMACNA "HVAC DUCT CONSTRUCTION STANDARDS". PROVIDE TURNING VANES CONSTRUCTED OF CURVED BLADES, SUPPORTED WITH BARS PERPENDICULAR TO BLADES, AND SET INTO SIDE STRIPS SUITABLE FOR MOUNTING IN DUCTWORK. FOLLOW SMACNA GUIDELINES FOR SPACING SUPPORT, AND CONSTRUCTION. ALL BLADES SHALL BE DOUBLE THICKNESS AIRFOIL TYPE.
E. BIRD SCREENS AND FRAMES: PROVIDE BIRD SCREENS THAT CONFORM TO ASTM E 2016, NO. 2 MESH, ALUMINUM OR STAINLESS STEEL. PROVIDE “MEDIUM-LIGHT” RATED ALUMINUM SCREENS. PROVIDE “LIGHT” RATES STAINLESS STEEL SCREENS.
F. DUCT-MOUNTED ACCESS DOORS: FABRICATE ACCESS PANELS ACCORDING TO SMACNA'S "HVAC DUCT CONSTRUCTION STANDARDS - METAL AND FLEXIBLE"; FIGURES 2-10, "DUCT ACCESS DOORS AND PANELS," AND 2-11, "ACCESS PANELS - ROUND DUCT."

PART 3 - EXECUTION

3.1 INSTALLATION

A. INSTALL DUCTWORK, ACCESSORIES, AND SUPPORTS ACCORDING TO SMACNA'S "HVAC DUCT CONSTRUCTION STANDARDS - METAL AND FLEXIBLE" UNLESS OTHERWISE INDICATED.
B. SEAL DUCTS TO THE FOLLOWING SEAL CLASSES ACCORDING TO SMACNA'S "HVAC DUCT CONSTRUCTION STANDARDS - METAL AND FLEXIBLE": 1-INCH WG, SEAL CLASS A.
C. AVOID PASSING THROUGH OR ABOVE ELECTRICAL EQUIPMENT SPACES AND ENCLOSURES.
D. CLEAN DUCT SYSTEMS BEFORE TESTING, ADJUSTING, AND BALANCING.

3.2 DUCTWORK SCHEDULE

A. EXPOSED DUCTWORK IN ARCHITECTURALLY FINISHED SPACES- ELECTRO-GALVANIZED STEEL SHEET.
B. CONCEALED DUCTWORK AND DUCTWORK IN UNFINISHED ARCHITECTURAL SPACES- GALVANIZED STEEL.

END OF SECTION

SECTION 233423 - HVAC EXHAUST FANS

PART 2 - PRODUCTS

2.1 PERFORMANCE REQUIREMENTS

A. PRODUCTS SHALL BE LICENSED TO USE THE AMCA-CERTIFIED RATINGS SEAL.
B. EXHAUST FANS SHALL COMPLY WITH UL 705. TYPE 1 FANS SHALL ALSO COMPLY WITH UL 762.
C. TYPE 1 FANS TO BE DESIGNED FOR HIGH HEAT OPERATION AT 300°F.
D. ELECTRICAL COMPONENTS, DEVICES, AND ACCESSORIES: LISTED AND LABELED AS DEFINED IN NFPA 70, BY A QUALIFIED TESTING AGENCY, AND MARKED FOR INTENDED LOCATION AND APPLICATION.

2.2 CENTRIFUGAL VENTILATORS

A. HOUSING: REMOVABLE, SPUN-ALUMINUM, DOME TOP AND OUTLET BAFFLE; SQUARE, ONE-PIECE, ALUMINUM BASE WITH VENTURI INLET CONE.
   1. UPBLAST UNITS: ALUMINUM DISCHARGE BAFFLE TO DIRECT DISCHARGE AIR UPWARD, WITH RAIN AND SNOW DRAINS.
B. FAN WHEELS: ALUMINUM HUB AND WHEEL WITH BACKWARD-INCLINED BLADES.
C. BELT-DRIVEN DRIVE ASSEMBLY: RESILIENTLY MOUNTED TO HOUSING.
   1. FAN SHAFT: TURNED, GROUND, AND POLISHED STEEL; KEYED TO WHEEL HUB.
   2. SHAFT BEARINGS: PERMANENTLY LUBRICATED, PERMANENTLY SEALED, SELF-ALIGNING BALL BEARINGS.
   3. PULLEYS: CAST-IRON, ADJUSTABLE-PITCH MOTOR PULLEY.
   4. FAN AND MOTOR ISOLATED FROM EXHAUST AIRSTREAM.
D. ACCESSORIES:
   1. DISCONNECT SWITCH: NON-FUSIBLE TYPE, WITH THERMAL-OVERLOAD PROTECTION, FACTORY WIRED THROUGH AN INTERNAL ALUMINUM CONDUIT.
   2. BIRD SCREENS: REMOVABLE, 1/2-INCH MESH, ALUMINUM OR BRASS WIRE.
   3. DAMPERS: COUNTERBALANCED, PARALLEL-BLADE, BACKDRAFT DAMPERS MOUNTED IN CURB BASE; FACTORY SET TO CLOSE WHEN FAN STOPS.
   4. MOTORIZED DAMPERS: PARALLEL-BLADE DAMPERS MOUNTED IN CURB BASE WITH ELECTRIC ACTUATOR; WIRED TO CLOSE WHEN FAN STOPS.
E. ROOF CURBS: 20 GAUGE GALVANIZED STEEL; MITERED AND WELDED CORNERS; 1-1/2-INCH THICK, RIGID, FIBERGLASS INSULATION ADHERED TO INSIDE WALLS; AND 1-1/2-INCH WOOD NAILER. SIZE AS REQUIRED TO SUIT ROOF OPENING AND FAN BASE.
   1. CONFIGURATION: SELF-FLASHING WITHOUT A CANT STRIP, WITH MOUNTING FLANGE.
   2. OVERALL HEIGHT: 12 INCHES FOR GENERAL EXHAUST FANS; 20 INCHES FOR KITCHEN EXHAUST FANS.
   3. PITCH MOUNTING: MANUFACTURE CURB FOR ROOF SLOPE.
   4. MOUNTING PEDESTAL: GALVANIZED STEEL WITH REMOVABLE ACCESS PANEL.
   5. TYPE 1 ROOF CURBS TO BE VENTED TYPE.
   6. TYPE 1 AND TYPE 2 ROOF CURBS TO BE HINGED TYPE.
F. CAPACITIES AND CHARACTERISTICS:
   1. SEE SCHEDULE.
G. MOTORS
   A.A. COMPLY WITH NEMA DESIGNATION, TEMPERATURE RATING, SERVICE FACTOR, ENCLOSURE TYPE, AND EFFICIENCY REQUIREMENTS FOR MOTORS.
      1.1. MOTOR SIZES: MINIMUM SIZE AS INDICATED. IF NOT INDICATED, LARGE ENOUGH SO DRIVEN LOAD WILL NOT REQUIRE MOTOR TO OPERATE IN SERVICE FACTOR RANGE ABOVE 1.0.
   A.B. ENCLOSURE TYPE: TOTALLY ENCLOSED, FAN COOLED.

PART 3 - EXECUTION

3.1 INSTALLATION

A. INSTALL UNITS WITH CLEARANCES FOR SERVICE AND MAINTENANCE.
B. ROOF-MOUNTED UNITS: INSTALL ROOF CURB ON ROOF STRUCTURE, ACCORDING TO ARI GUIDELINE B. INSTALL AND SECURE ROOF-MOUNTED FANS ON CURBS, AND COORDINATE ROOF PENETRATIONS AND FLASHING WITH ROOF CONSTRUCTION.

END OF SECTION

SECTION 233713 - DIFFUSERS, REGISTERS, AND GRILLES

PART 1 - GENERAL

PART 2 - PRODUCTS

2.1 DIFFUSERS, REGISTERS, AND GRILLES:

A. REFER TO SCHEDULES FOR FINISH TYPE, COLOR, MATERIAL, AND MOUNTING.

PART 3 - EXECUTION

3.1 INSTALLATION

A. INSTALL DIFFUSERS, REGISTERS, AND GRILLES LEVEL AND PLUMB.
B. CEILING-MOUNTED OUTLETS AND INLETS: DRAWINGS INDICATE GENERAL ARRANGEMENT OF DUCTS, FITTINGS, AND ACCESSORIES. MAKE FINAL LOCATIONS WHERE INDICATED, AS MUCH AS PRACTICAL. FOR UNITS INSTALLED IN LAY-IN CEILING PANELS, LOCATE UNITS IN THE CENTER OF PANEL UNLESS OTHERWISE INDICATED. WHERE ARCHITECTURAL FEATURES OR OTHER ITEMS CONFLICT WITH INSTALLATION, NOTIFY ARCHITECT FOR A DETERMINATION OF FINAL LOCATION.
C. AFTER INSTALLATION, ADJUST DIFFUSERS, REGISTERS, AND GRILLES TO AIR PATTERNS INDICATED, OR AS DIRECTED, BEFORE STARTING AIR BALANCING.

2. END OF SECTION

CORE STATES GROUP
135 Water Street
Suite 201
Naperville, IL 60540
312.718.5415
core-states.com

ISSUED FOR CONSTRUCTION

CAVA

CAVA - SAGINAW TX
1428 N OLD DECATUR ROAD #150
SAGINAW, TX 76179
FOR
CAVA
14 Ridge Square NW #500, WASHINGTON, DC 20016

AOR PROJECT NUMBER:
CAV.36838

ISSUE	DATE
TEST FIT	MAR 30, 2023
LEASE EXHIBIT	APR 13, 2023
LEASE EXHIBIT REV	MAY 25, 2023
LEASE EXHIBIT REV	JUN 13, 2023
SCH DES SET	JUL 21, 2023
PERMIT SET	FEB 5, 2024
BID SET	APR 12, 2024
1 BUILDING REVIEW	MAY 7, 2024
IFC SET	JUL 1, 2024

MECHANICAL SPECIFICATIONS

SHEET:
M701

9/20/2023 4:35 PM

SPECIFICATIONS - DIVISION 23 - HVAC (CONTINUED)

SECTION 237339 - DIRECT-FIRED MAKE-UP AIR UNIT

PART 2 - PRODUCTS

2.1 PACKAGED UNITS

A. FACTORY-ASSEMBLED, PREWIRED, SELF-CONTAINED UNIT CONSISTING OF CABINET, SUPPLY FAN, CONTROLS, FILTERS, AND DIRECT-FIRED GAS FURNACE TO BE INSTALLED OUTSIDE THE BUILDING.

2.2 CABINET

A. CABINET: GALVANIZED-STEEL PANELS WITH LIFTING LUGS. CABINET SHALL BE FULLY WEATHERIZED FOR OUTDOOR INSTALLATION.. HEAT-RESISTANT, BAKED-ENAMEL FINISH. VERTICAL-PATTERN, GALVANIZED-STEEL DISCHARGE PLENUM WITH DIFFUSERS INCORPORATING INDIVIDUALLY ADJUSTABLE VANES.

B. ROOF CURB: FULL-PERIMETER CURB OF SHEET METAL, MINIMUM 20 INCHES HIGH, WITH WOOD NAILER, NEOPRENE SEALING STRIP, AND WELDED Z-BAR FLASHING.

C. OUTDOOR-AIR INTAKE: GALVANIZED-STEEL HOOD WITH RAIN BAFFLES, BIRD SCREEN, AND FINISH TO MATCH CABINET; AND SIZED TO SUPPLY 100 PERCENT OUTDOOR AIR. GALVANIZED-STEEL, OPPOSED-BLADE MOTORIZED DAMPERS WITH VINYL BLADE SEALS AND STAINLESS-STEEL JAMB SEAL.

D. FILTERS: COMPLY WITH NFPA 90A; 1 INCH THICK.

2.3 SUPPLY-AIR FAN

A. FAN: CENTRIFUGAL, RATED ACCORDING TO AMCA 210; STATICALLY AND DYNAMICALLY BALANCED, GALVANIZED STEEL; MOUNTED ON SOLID-STEEL SHAFT.

B. MOTOR: TOTALLY ENCLOSED, SINGLE SPEED MOTOR.

C. DRIVE: V-BELT DRIVE WITH MATCHING FAN PULLEY AND ADJUSTABLE MOTOR SHEAVES AND BELT ASSEMBLY.

D. GAS PRESSURE GAUGE: 2-1/2 INCH DIAMETER AND 1/4 INCH THREAD SIZE.

2.4 DIRECT-FIRED GAS FURNACE

A. DESCRIPTION: FACTORY ASSEMBLED, PIPED, AND WIRED; AND COMPLYING WITH ANSI Z83.4, ANSI Z83.18, AND NFPA 54. CAST-IRON BURNER WITH STAINLESS-STEEL MIXING PLATES. SINGLE-STAGE CONTROL VALVE. FUEL: NATURAL GAS.

B. SAFETY CONTROLS: AIRFLOW PROVING SWITCH; HIGH-TEMPERATURE LIMIT; SAFETY LOCKOUT; REDUNDANT, AUTOMATIC, MAIN GAS VALVES; ELECTRIC PILOT VALVE; MODULATING TEMPERATURE CONTROL VALVE; MAIN AND PILOT GAS REGULATORS; MAIN AND PILOT MANUAL SHUTOFF VALVES; MAIN AND PILOT PRESSURE TAPS; AND HIGH-LOW GAS PRESSURE SWITCHES TO COMPLY WITH ANSI STANDARDS.

2.5 CONTROLS

A. FACTORY-WIRED, FUSE-PROTECTED CONTROL TRANSFORMER, CONNECTION FOR POWER SUPPLY AND FIELD-WIRED UNIT TO REMOTE CONTROL PANEL.

1. FAN CONTROL: INTERLOCK FAN TO START WITH EXHAUST FAN(S) AND WITH RTU COOLING CYCLE.
2. OUTDOOR-AIR DAMPER CONTROL: OUTDOOR-AIR DAMPER OPENS WHEN SUPPLY FAN STARTS, AND CLOSES WHEN FAN STOPS.
3. TEMPERATURE CONTROL: OPERATES GAS VALVE TO MAINTAIN SUPPLY-AIR TEMPERATURE.

2.6 INSTALLATION

A. INSTALL GAS-FIRED UNITS ACCORDING TO NFPA 54.

B. INSTALL ROOF CURB ON ROOF STRUCTURE, ACCORDING TO ARI GUIDELINE B OR NRCA'S "LOW-SLOPE MEMBRANE ROOFING CONSTRUCTION DETAILS MANUAL."

C. CONNECT GAS PIPING WITH SHUTOFF VALVE AND UNION AND WITH SUFFICIENT CLEARANCE FOR BURNER REMOVAL AND SERVICE.

D. DRAWINGS INDICATE THE GENERAL ARRANGEMENT OF DUCTS. CONNECT SUPPLY DUCTS TO DIRECT-FIRED MAU WITH FLEXIBLE DUCT CONNECTORS; FLEXIBLE DUCT CONNECTORS ARE SPECIFIED IN SECTION 233100 "HVAC DUCTS AND CASINGS."

END OF SECTION

SECTION 237413 - PACKAGED ROOFTOP UNITS

1.1 SUMMARY

A. THIS SECTION INCLUDES PACKAGED, ROOFTOP UNITS WITH THE FOLLOWING COMPONENTS AND ACCESSORIES:

1. DIRECT-EXPANSION COOLING.
2. HUMIDITY CONTROL WITH HOT-GAS REHEAT (OPTIONAL)
3. GAS FURNACE.
4. ECONOMIZER OUTDOOR-AND RETURN-AIR DAMPER SECTION.
5. INTEGRAL, SPACE TEMPERATURE CONTROLS.
6. ROOF CURBS.

1.2 SECTION REQUIREMENTS

A. SUBMITTALS:

1. PRODUCT DATA: INCLUDE MANUFACTURER'S TECHNICAL DATA FOR EACH RTU, INCLUDING RATED CAPACITIES, DIMENSIONS, REQUIRED CLEARANCES, CHARACTERISTICS, FURNISHED SPECIALTIES, AND ACCESSORIES.

PART 2 - PRODUCTS

2.1 CASING

A. GENERAL FABRICATION REQUIREMENTS FOR CASINGS: FORMED AND REINFORCED INSULATED PANELS, FABRICATED TO ALLOW REMOVAL FOR ACCESS TO INTERNAL PARTS AND COMPONENTS, WITH JOINTS BETWEEN SECTIONS SEALED.

B. EXTERIOR CASING MATERIAL: GALVANIZED STEEL WITH FACTORY-PAINTED FINISH, WITH PITCHED ROOF PANELS AND KNOCKOUTS WITH GROMMET SEALS FOR ELECTRICAL AND PIPING CONNECTIONS AND LIFTING LUGS.

1. CASING THICKNESS: 16 GAUGE THICK.

C. CASING INSULATION AND ADHESIVE: COMPLY WITH NFPA 90A.

1. MATERIALS: ASTM C 1071, TYPE I.
2. THICKNESS: 1/2 INCH
3. LINER MATERIALS SHALL HAVE AIR-STREAM SURFACE INSULATED WITH A MINIMUM 1/2-IN. THICK, MINIMUM 1 1/2 LB DENSITY, FLEXIBLE FIBERGLASS INSULATION BONDED WITH A PHENOLIC BINDER, NEOPRENE COATED ON THE AIR SIDE.
4. LINER ADHESIVE: COMPLY WITH ASTM C 916, TYPE I.

D. UNIT SHALL HAVE A THRU-THE-BASE GAS AND ELECTRICAL CONNECTIONS.

2.2 FANS

OPTION A OR B:

A. DIRECT-DRIVEN SUPPLY-AIR FANS: DOUBLE WIDTH, BACKWARD INCLINED, CENTRIFUGAL; WITH PERMANENTLY LUBRICATED, MOTOR RESILIENTLY MOUNTED IN THE FAN INLET. ALUMINUM OR PAINTED-STEEL WHEELS, AND GALVANIZED- OR PAINTED-STEEL FAN SCROLLS.

B. BELT-DRIVEN SUPPLY-AIR FANS: DOUBLE WIDTH, FORWARD CURVED, CENTRIFUGAL; WITH PERMANENTLY LUBRICATED, SINGLE-SPEED MOTOR INSTALLED ON AN ADJUSTABLE FAN BASE RESILIENTLY MOUNTED IN THE CASING. ALUMINUM OR PAINTED-STEEL WHEELS, AND GALVANIZED- OR PAINTED-STEEL FAN SCROLLS.

C. CONDENSER-COIL FAN: DIRECT DRIVE, PROPELLER, MOUNTED ON SHAFT OF PERMANENTLY LUBRICATED MOTOR WITH THERMAL OVERLOAD PROTECTION.

D. POWER EXHAUST: FORWARD CURVED, SHAFT MOUNTED ON PERMANENTLY LUBRICATED MOTOR.

.

2.3 COILS

A. SUPPLY-AIR REFRIGERANT COIL:

1. ALUMINUM-PLATE FIN AND SEAMLESS INTERNALLY GROOVED COPPER TUBE IN STEEL CASING WITH EQUALIZING-TYPE VERTICAL DISTRIBUTOR.
2. POLYMER STRIP SHALL PREVENT ALL COPPER COIL FROM CONTACTING STEEL COIL FRAME OR CONDENSATE PAN.
3. CATHODIC EPOXY COATING.
4. CONDENSATE DRAIN PAN: GALVANIZED STEEL WITH CORROSION-RESISTANT COATING FORMED WITH PITCH AND DRAIN CONNECTIONS.

B. OUTDOOR-AIR REFRIGERANT COIL:

1. ALUMINUM-PLATE FIN AND SEAMLESS INTERNALLY GROOVED COPPER TUBE IN STEEL CASING WITH EQUALIZING-TYPE VERTICAL DISTRIBUTOR.
2. POLYMER STRIP SHALL PREVENT ALL COPPER COIL FROM CONTACTING STEEL COIL FRAME OR CONDENSATE PAN.
3. CATHODIC EPOXY COATING.

C. HOT-GAS REHEAT REFRIGERANT COIL (OPTIONAL):

1. ALUMINUM-PLATE FIN AND SEAMLESS INTERNALLY GROOVED COPPER TUBE IN STEEL CASING WITH EQUALIZING-TYPE VERTICAL DISTRIBUTOR.
2. POLYMER STRIP SHALL PREVENT ALL COPPER COIL FROM CONTACTING STEEL COIL FRAME OR CONDENSATE PAN.
3. CATHODIC EPOXY COATING.

2.4 REFRIGERANT CIRCUIT COMPONENTS

A. NUMBER OF REFRIGERANT CIRCUITS: TWO

B. COMPRESSOR: HERMETIC, SCROLL, MOUNTED ON VIBRATION ISOLATORS; WITH INTERNAL OVERCURRENT AND HIGH-TEMPERATURE PROTECTION, INTERNAL PRESSURE RELIEF AND CRANKCASE HEATER.

C. REFRIGERATION SPECIALTIES:

1. REFRIGERANT: R-410A
2. EXPANSION VALVE WITH REPLACEABLE THERMOSTATIC ELEMENT.
3. REFRIGERANT FILTER/DRYER.
4. MANUAL-RESET HIGH-PRESSURE SAFETY SWITCH.
5. AUTOMATIC-RESET LOW-PRESSURE SAFETY SWITCH.
6. MINIMUM OFF-TIME RELAY.
7. AUTOMATIC-RESET COMPRESSOR MOTOR THERMAL OVERLOAD.
8. BRASS SERVICE VALVES INSTALLED IN COMPRESSOR SUCTION AND LIQUID LINES.
9. LOW-AMBIENT KIT HIGH-PRESSURE SENSOR.
10. HOT-GAS REHEAT SOLENOID VALVE WITH A REPLACEABLE MAGNETIC COIL.

2.5 AIR FILTRATION

A. PROVIDE 2" THROW-AWAY FIBERGLASS FILTERS.

2.6 GAS FURNACE

A. BURNERS: IN-SHOT TYPE CONSTRUCTED OF ALUMINUM-COATED STEEL.

1. FUEL: NATURAL GAS.
2. IGNITION: DIRECT SPARK IGNITION (DSI).

VERIFY AVAILABILITY OF HIGH-ALTITUDE FEATURE WITH MANUFACTURERS.

3. HIGH-ALTITUDE KIT: FOR PROJECT ELEVATIONS MORE THAN 2,000 FEET ABOVE SEA LEVEL.

B. HEAT-EXCHANGER AND DRAIN PAN: STAINLESS STEEL.

C. INDUCED DRAFT COMBUSTION BLOWER.

D. SAFETY CONTROLS:

1. GAS CONTROL VALVE: TWO STAGE.
2. GAS TRAIN: SINGLE-BODY, REGULATED, REDUNDANT, 24-V AC GAS VALVE ASSEMBLY CONTAINING PILOT SOLENOID VALVE, PILOT FILTER, PRESSURE REGULATOR, PILOT SHUTOFF, AND MANUAL SHUTOFF.

2.7 DAMPERS

A. OUTDOOR AND RETURN AIR MIXING DAMPERS: PARALLEL OR OPPOSED-BLADE GALVANIZED-STEEL DAMPERS MECHANICALLY FASTENED TO CADMIUM PLATED FOR GALVANIZED-STEEL OPERATING ROD IN REINFORCED CABINET. CONNECT OPERATING RODS WITH COMMON LINKAGE AND INTERCONNECT LINKAGES SO DAMPERS OPERATE SIMULTANEOUSLY.

1. DAMPER MOTOR: MODULATING WITH ADJUSTABLE MINIMUM POSITION.
2. RELIEF AIR DAMPER: GRAVITY ACTUATED, WITH BIRD SCREEN AND HOOD.

2.8 ELECTRICAL POWER CONNECTION

A. PROVIDE FOR SINGLE CONNECTION OF POWER TO UNIT WITH UNIT-MOUNTED DISCONNECT SWITCH ACCESSIBLE FROM OUTSIDE UNIT AND CONTROL-CIRCUIT TRANSFORMER WITH BUILT-IN OVERCURRENT PROTECTION.

2.9 CONTROLS

A. BASIC UNIT CONTROLS:

1. CONTROL-VOLTAGE TRANSFORMER.
2. WALL-MOUNTED THERMOSTAT OR SENSOR WITH THE FOLLOWING FEATURES:
   a. HEAT-COOL-OFF SWITCH.
   b. FAN ON-AUTO SWITCH.
   c. FAN-SPEED SWITCH.
   d. AUTOMATIC CHANGEOVER.
   e. ADJUSTABLE DEADBAND.
   f. EXPOSED SET POINT.
   g. EXPOSED INDICATION.
   h. DEGREE F INDICATION.
   i. UNOCCUPIED-PERIOD-OVERRIDE PUSH BUTTON.
   j. DATA ENTRY AND ACCESS PORT TO INPUT TEMPERATURE AND HUMIDITY SET POINTS, OCCUPIED AND UNOCCUPIED PERIODS, AND OUTPUT ROOM TEMPERATURE AND HUMIDITY, SUPPLY-AIR TEMPERATURE, OPERATING MODE, AND STATUS.
3. WALL-MOUNTED HUMIDISTAT OR SENSOR WITH THE FOLLOWING FEATURES:
   a. EXPOSED SET POINT.
   b. EXPOSED INDICATION.
4. REMOTE WALL-MOUNTED ANNUNCIATOR PANEL WITH KEYED ACCESS FOR EACH UNIT:
   a. LIGHTS TO INDICATE POWER ON, UNIT ALARM OR FAILURE, SMOKE DETECTION.

B. DDC CONTROLLER:

1. CONTROLLER SHALL HAVE VOLATILE-MEMORY BACKUP.
2. SAFETY CONTROL OPERATION:
   a. SMOKE DETECTORS: STOP FAN AND CLOSE OUTDOOR-AIR DAMPER IF SMOKE IS DETECTED. PROVIDE ADDITIONAL CONTACTS FOR ALARM INTERFACE TO FIRE ALARM CONTROL PANEL.
   b. FIRE ALARM CONTROL PANEL INTERFACE WHERE APPLICABLE.
   c. LOW-DISCHARGE TEMPERATURE: STOP FAN AND CLOSE OUTDOOR-AIR DAMPER IF SUPPLY AIR TEMPERATURE IS LESS THAN 40°F.
   RETAIN FIRST SUBPARAGRAPH BELOW FOR AIR-TO-AIR HEAT-PUMP FEATURE.
   d. DEFROST CONTROL FOR CONDENSER COIL: PRESSURE DIFFERENTIAL SWITCH TO INITIATE DEFROST SEQUENCE.
3. UNIT SHALL BE CAPABLE OF DIRECT COMMUNICATION WITH GENERIC OPEN PROTOCOL SUCH AS BACNET MS/TP, LONTALK, OR MODUS. THIS WILL ALLOW THE UNIT TO INTEGRATE WITH A FACILITY ENERGY MANAGEMENT SYSTEM.
4. SCHEDULED OPERATION: OCCUPIED AND UNOCCUPIED PERIODS ON SEVEN-DAY CLOCK WITH A MINIMUM OF FOUR PROGRAMMABLE PERIODS PER DAY.
5. UNOCCUPIED PERIOD:
   a. HEATING SETBACK: 10°F.
   b. COOLING SETBACK: SYSTEM OFF.
   c. OVERRIDE OPERATION: TWO HOURS.
6. SUPPLY FAN OPERATION:
   a. OCCUPIED PERIODS: RUN FAN CONTINUOUSLY.
   b. UNOCCUPIED PERIODS: CYCLE FAN TO MAINTAIN SETBACK TEMPERATURE.
7. REFRIGERANT CIRCUIT OPERATION:
   a. OCCUPIED PERIODS: CYCLE OR STAGE COMPRESSORS, AND OPERATE HOT-GAS BYPASS TO MATCH COMPRESSOR OUTPUT TO COOLING LOAD TO MAINTAIN ROOM TEMPERATURE AND HUMIDITY. CYCLE CONDENSER FANS TO MAINTAIN MAXIMUM HOT-GAS PRESSURE. OPERATE LOW-AMBIENT CONTROL KIT TO MAINTAIN MINIMUM HOT-GAS PRESSURE.
   b. UNOCCUPIED PERIODS: CYCLE COMPRESSORS AND CONDENSER FANS FOR HEATING TO MAINTAIN SETBACK TEMPERATURE.
8. HOT-GAS REHEAT-COIL OPERATION (OPTIONAL):
   a. OCCUPIED PERIODS: HUMIDISTAT OPENS HOT-GAS VALVE TO PROVIDE HOT-GAS REHEAT, AND CYCLES COMPRESSOR.
   b. UNOCCUPIED PERIODS: REHEAT NOT REQUIRED.
9. GAS FURNACE OPERATION:
   a. OCCUPIED PERIODS: STAGE BURNER TO MAINTAIN ROOM TEMPERATURE.
   b. UNOCCUPIED PERIODS: CYCLE BURNER TO MAINTAIN SETBACK TEMPERATURE.
10. FIXED MINIMUM OUTDOOR-AIR DAMPER OPERATION:
   a. OCCUPIED PERIODS: OPEN TO 25 PERCENT.
   b. UNOCCUPIED PERIODS: CLOSE THE OUTDOOR-AIR DAMPER.
11. ECONOMIZER OUTDOOR-AIR DAMPER OPERATION:
   a. OCCUPIED PERIODS: OPEN TO 25 PERCENT FIXED MINIMUM INTAKE, AND MAXIMUM 100 PERCENT OF THE FAN CAPACITY TO COMPLY WITH ASHRAE CYCLE II. CONTROLLER SHALL PERMIT AIR-SIDE ECONOMIZER OPERATION WHEN OUTDOOR AIR IS LESS THAN 60 ° F. USE MIXED-AIR TEMPERATURE AND SELECT BETWEEN OUTDOOR-AIR AND RETURN-AIR ENTHALPY TO ADJUST MIXING DAMPERS DURING ECONOMIZER CYCLE OPERATION, LOCK OUT COOLING.
   b. UNOCCUPIED PERIODS: CLOSE OUTDOOR-AIR DAMPER AND OPEN RETURN-AIR DAMPER.

2.10 ACCESSORIES

A. DUPLEX, 115-V, GROUND-FAULT-INTERRUPTER OUTLET WITH 15-A OVERCURRENT PROTECTION. INCLUDE TRANSFORMER IF REQUIRED.

B. LOW-AMBIENT KIT STAGED DOWN TO 0°F.

C. FILTER DIFFERENTIAL PRESSURE SWITCH WITH SENSOR TUBING ON EITHER SIDE OF FILTER. SET FOR FINAL FILTER PRESSURE LOSS.

D. HAIL GUARDS OF GALVANIZED STEEL, PAINTED TO MATCH CASING.

E. DUCT MOUNTED SMOKE DETECTOR IN RETURN AIR STREAM CAPABLE OF SHUTTING DOWN THE UNIT IN THE PRESENCE OF SMOKE DETECTION.

2.11 ROOF CURBS

A. MATERIALS: GALVANIZED STEEL WITH CORROSION-PROTECTION COATING, WATERTIGHT GASKETS, AND FACTORY-INSTALLED WOOD NAILER; COMPLYING WITH NRCA STANDARDS.

1. CURB INSULATION AND ADHESIVE: COMPLY WITH NFPA 90A OR NFPA 90B.
   a. MATERIALS: ASTM C 1071, TYPE I OR II.
   b. THICKNESS: 1-1/2 INCHES.
2. APPLICATION: FACTORY APPLIED WITH ADHESIVE AND MECHANICAL FASTENERS TO THE INTERNAL SURFACE OF CURB.
   a. LINER ADHESIVE: COMPLY WITH ASTM C 916, TYPE I.
   b. MECHANICAL FASTENERS: GALVANIZED STEEL, SUITABLE FOR ADHESIVE ATTACHMENT, MECHANICAL ATTACHMENT, OR WELDING ATTACHMENT TO DUCT WITHOUT DAMAGING LINER WHEN APPLIED AS RECOMMENDED BY MANUFACTURER AND WITHOUT CAUSING LEAKAGE IN CABINET.
   c. LINER MATERIALS SHALL HAVE AIR-STREAM SURFACE INSULATED WITH A MINIMUM 1/2-IN. THICK, MINIMUM 1 1/2 LB DENSITY, FLEXIBLE FIBERGLASS INSULATION BONDED WITH A PHENOLIC BINDER, NEOPRENE COATED ON THE AIR SIDE.
   d. LINER ADHESIVE: COMPLY WITH ASTM C 916, TYPE I.

B. CURB HEIGHT: 14 INCHES TYPICAL UNO. PROVIDE 24 INCH CURB IN AREAS WITH EXPECTED HEAVY SNOWFALL.

PART 3 - EXECUTION

3.1 EXAMINATION

A. EXAMINE SUBSTRATES, AREAS, AND CONDITIONS, WITH INSTALLER PRESENT, FOR COMPLIANCE WITH REQUIREMENTS FOR INSTALLATION TOLERANCES AND OTHER CONDITIONS AFFECTING PERFORMANCE OF RTUS.

B. EXAMINE ROUGHING-IN FOR RTUS TO VERIFY ACTUAL LOCATIONS OF PIPING AND DUCT CONNECTIONS BEFORE EQUIPMENT INSTALLATION.

C. EXAMINE ROOFS FOR SUITABLE CONDITIONS WHERE RTUS WILL BE INSTALLED.

D. PROCEED WITH INSTALLATION ONLY AFTER UNSATISFACTORY CONDITIONS HAVE BEEN CORRECTED.

3.2 INSTALLATION

A. ROOF CURB: INSTALL ON ROOF STRUCTURE, LEVEL AND SECURE. INSTALL RTUS ON CURBS AND COORDINATE ROOF PENETRATIONS AND FLASHING WITH ROOF CONSTRUCTION. RTUS TO UPPER CURB RAIL, AND SECURE CURB BASE TO ROOF FRAMING OR CONCRETE BASE WITH ANCHOR BOLTS.

3.3 CONNECTIONS

A. . THE FOLLOWING ARE SPECIFIC CONNECTION REQUIREMENTS:

1. INSTALL DUCTS TO TERMINATION AT TOP OF ROOF CURB.
2. REMOVE ROOF DECKING ONLY AS REQUIRED FOR PASSAGE OF DUCTS. DO NOT CUT OUT DECKING UNDER ENTIRE ROOF CURB.

3.4 COORDINATION

A. CONTRACTOR TO COORDINATE WITH KITCHEN EQUIPMENT SUPPLIER TO ENSURE THAT THE RTUS ARE COORDINATED WITH THE KITCHEN EQUIPMENT, PARTICULARLY THE EXHAUST HOODS AND THE MAKE-UP AIR UNIT, TO PROPERLY PRESSURIZE THE BUILDING/SPACE.

B. CONTRACTOR TO ENSURE THAT ALL THERMOSTATS AND SENSORS ARE COMPATIBLE WITH THE RTU CONTROLS.

3.5 FIELD QUALITY CONTROL

A. MANUFACTURER'S FIELD SERVICE: ENGAGE A FACTORY-AUTHORIZED SERVICE REPRESENTATIVE TO INSPECT, TEST, AND ADJUST COMPONENTS, ASSEMBLIES, AND EQUIPMENT INSTALLATIONS, INCLUDING CONNECTIONS. REPORT RESULTS IN WRITING.

B. PERFORM TESTS AND INSPECTIONS AND PREPARE TEST REPORTS.

1. MANUFACTURER'S FIELD SERVICE: ENGAGE A FACTORY-AUTHORIZED SERVICE REPRESENTATIVE TO INSPECT COMPONENTS, ASSEMBLIES, AND EQUIPMENT INSTALLATIONS, INCLUDING CONNECTIONS, AND TO ASSIST IN TESTING. REPORT RESULTS IN WRITING.

C. TESTS AND INSPECTIONS:

1. AFTER INSTALLING RTUS AND AFTER ELECTRICAL CIRCUITRY HAS BEEN ENERGIZED, TEST UNITS FOR COMPLIANCE WITH REQUIREMENTS.
2. OPERATIONAL TEST: AFTER ELECTRICAL CIRCUITRY HAS BEEN ENERGIZED, START UNITS TO CONFIRM PROPER MOTOR ROTATION AND UNIT OPERATION.
3. TEST AND ADJUST CONTROLS AND SAFETIES. REPLACE DAMAGED AND MALFUNCTIONING CONTROLS AND EQUIPMENT.

D. REMOVE AND REPLACE MALFUNCTIONING UNITS AND RETEST AS SPECIFIED ABOVE.

3.6 STARTUP SERVICE

A. ENGAGE A FACTORY-AUTHORIZED SERVICE REPRESENTATIVE TO PERFORM STARTUP SERVICE.

B. COMPLETE INSTALLATION AND STARTUP CHECKS ACCORDING TO MANUFACTURER'S WRITTEN INSTRUCTIONS AND DO THE FOLLOWING:

1. INSPECT FOR VISIBLE DAMAGE TO UNIT CASING, FURNACE COMBUSTION CHAMBER, COMPRESSOR, COILS, AND FANS.
2. VERIFY THAT LABELS ARE CLEARLY VISIBLE, CLEARANCES HAVE BEEN PROVIDED FOR SERVICING, CONTROLS ARE CONNECTED AND OPERABLE, AND FILTERS ARE INSTALLED.
3. CLEAN CONDENSER COIL AND FURNACE AND INSPECT FOR CONSTRUCTION DEBRIS.
4. REMOVE PACKING FROM VIBRATION ISOLATORS.
5. VERIFY LUBRICATION ON FAN AND MOTOR BEARINGS.
6. INSPECT FAN-WHEEL ROTATION FOR MOVEMENT IN CORRECT DIRECTION WITHOUT VIBRATION AND BINDING.
7. ADJUST FAN BELTS TO PROPER ALIGNMENT AND TENSION.
8. START UNIT ACCORDING TO MANUFACTURER'S WRITTEN INSTRUCTIONS.
   a. INSPECT AND RECORD PERFORMANCE OF INTERLOCKS AND PROTECTIVE DEVICES; VERIFY SEQUENCES.
10. OPERATE UNIT FOR AN INITIAL PERIOD AS RECOMMENDED OR REQUIRED BY MANUFACTURER.
11. PERFORM THE FOLLOWING OPERATIONS FOR BOTH MINIMUM AND MAXIMUM FIRING. ADJUST BURNER FOR PEAK EFFICIENCY.
   a. MEASURE GAS PRESSURE ON MANIFOLD.
   b. INSPECT OPERATION OF POWER VENTS.
   c. MEASURE SUPPLY-AIR TEMPERATURE AND VOLUME WHEN BURNER IS AT MAXIMUM FIRING RATE AND WHEN BURNER IS OFF. CALCULATE USEFUL HEAT TO SUPPLY AIR.
20. ADJUST AND INSPECT HIGH-TEMPERATURE LIMITS.
21. INSPECT OUTDOOR-AIR DAMPERS FOR PROPER STROKE AND INTERLOCK WITH RETURN-AIR DAMPERS.
22. INSPECT CONTROLS FOR CORRECT SEQUENCING OF HEATING, MIXING DAMPERS, REFRIGERATION, AND NORMAL AND EMERGENCY SHUTDOWN.
23. SIMULATE MAXIMUM COOLING DEMAND AND INSPECT THE FOLLOWING:
   a. COMPRESSOR REFRIGERANT SUCTION AND HOT-GAS PRESSURES.
   b. SHORT CIRCUITING OF AIR THROUGH CONDENSER COIL OR FROM CONDENSER FANS TO OUTDOOR-AIR INTAKE.
27. VERIFY OPERATION OF REMOTE PANEL INCLUDING PILOT-LIGHT OPERATION AND FAILURE MODES. INSPECT THE FOLLOWING:
   a. HIGH-TEMPERATURE LIMIT ON GAS-FIRED HEAT EXCHANGER.
   b. LOW-TEMPERATURE SAFETY OPERATION.
   c. FILTER HIGH-PRESSURE DIFFERENTIAL ALARM.
   d. ECONOMIZER TO MINIMUM OUTDOOR-AIR CHANGEOVER.
   e. RELIEF-AIR FAN OPERATION.
   f. SMOKE ALARMS.
28. AFTER STARTUP AND PERFORMANCE TESTING AND PRIOR TO SUBSTANTIAL COMPLETION, REPLACE EXISTING FILTERS WITH NEW FILTERS.

3.7 CLEANING AND ADJUSTING

A. OCCUPANCY ADJUSTMENTS: WHEN REQUESTED WITHIN 12 MONTHS OF DATE OF SUBSTANTIAL COMPLETION, PROVIDE ON-SITE ASSISTANCE IN ADJUSTING SYSTEM TO SUIT ACTUAL OCCUPIED CONDITIONS. PROVIDE UP TO TWO VISITS TO SITE DURING OTHER-THAN-NORMAL OCCUPANCY HOURS FOR THIS PURPOSE.

B. AFTER COMPLETING SYSTEM INSTALLATION AND TESTING, ADJUSTING, AND BALANCING RTU AND AIR-DISTRIBUTION SYSTEMS, CLEAN FILTER HOUSINGS AND INSTALL NEW FILTERS.

CORE STATES GROUP

135 Water Street
Suite 201
Naperville, IL 60540
312.718.5415
core-states.com

ISSUED FOR CONSTRUCTION

CAVA

CAVA - SAGINAW TX
1428 N OLD DECATUR ROAD #150
SAGINAW, TX 76179
FOR
CAVA
14 Ridge Square NW #500, WASHINGTON, DC 20016

AOR PROJECT NUMBER:
CAV.36838

ISSUE	DATE
TEST FIT	MAR 30, 2023
LEASE EXHIBIT	APR 13, 2023
LEASE EXHIBIT REV	MAY 25, 2023
LEASE EXHIBIT REV	JUN 13, 2023
SCH DES SET	JUL 21, 2023
PERMIT SET	FEB 5, 2024
BID SET	APR 12, 2024
BUILDING REVIEW	MAY 7, 2024
IFC SET	JUL 1, 2024

MECHANICAL SPECIFICATIONS

SHEET:
M702

9/20/2023 5:00 PM