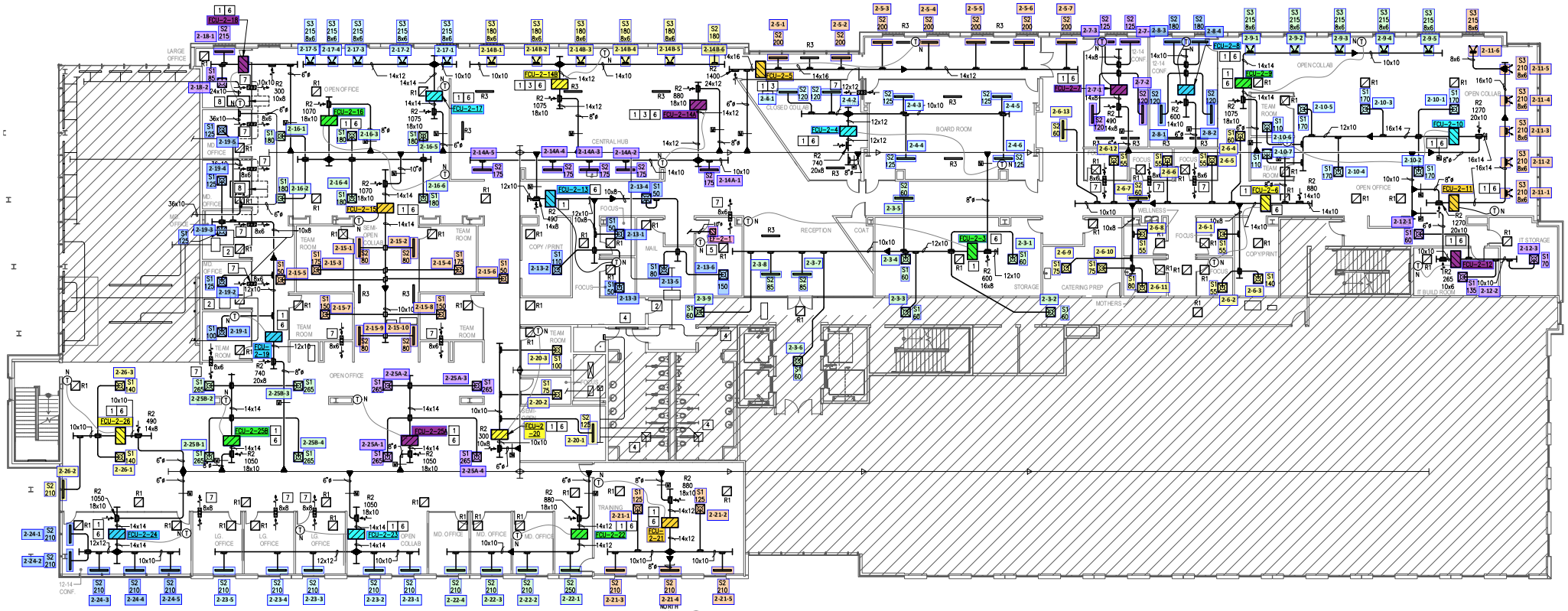

1 FLOOR PLAN - MECHANICAL